Which of the following is the pressure correction factor formula?

Select one:

a.
PCF=MeterPressure+LocalAtmosphericPressureStandardPressurePCF=MeterPressure+LocalAtmosphericPressureStandardPressure

b.
PCF=MeterPressure×AbsolutePressureSeaLevelPressurePCF=MeterPressure×AbsolutePressureSeaLevelPressure

c.
PCF=MeterPressure×StandardPressureLocalAtmosphericPressurePCF=MeterPressure×StandardPressureLocalAtmosphericPressure

d.
PCF=MeterPressure+StandardPressureLocalAtmosphericPressurePCF=MeterPressure+StandardPressureLocalAtmosphericPressure

Feedback

Your answer is correct.

The correct answer is: PCF=MeterPressure+LocalAtmosphericPressureStandardPressurePCF=MeterPressure+LocalAtmosphericPressureStandardPressure

Question text

Which of the following is the temperature correction factor formula?

Select one:

a.
TCF=GasTemp+460(273)StandardTemp+460(273)TCF=GasTemp+460(273)StandardTemp+460(273)

b.
TCF=StandardTemp+460(273)StandardPressure+14.73TCF=StandardTemp+460(273)StandardPressure+14.73

c.
TCF=StandardPressure+14.73StandardTemp+460(273)TCF=StandardPressure+14.73StandardTemp+460(273)

d.
TCF=StandardTemp+460(273)GasTemp+460(273)TCF=StandardTemp+460(273)GasTemp+460(273)

Feedback

Your answer is correct.

The correct answer is: TCF=StandardTemp+460(273)GasTemp+460(273)TCF=StandardTemp+460(273)GasTemp+460(273)

Question text

Simply stated, Boyle's Law says that if the pressure exerted upon a gas increases, its volume will Answer decreases .

Feedback

The correct answer is: decrease

Question text

Simply stated, Charles' Law says that if the temperature exerted upon a gas increases, its volume will Answer increase .

Feedback

The correct answer is: increase

Question text

Which type of meter has the correction factor stamped on a brass tag attached to the meter? Answer compensat

Feedback

The correct answer is: Pressure Factor Measurement

Question text

Clock the input using the following information:

- **Test Dial = 5 Ft.3Ft.3**
- **Time for One Revolution = 15 seconds**
- **Gas = Natural**
- **Local Atmospheric Pressure = 14.28 Psi**
- **Meter Pressure = 10 Psi**

Input = Answer 1597200 **Btuh**

Feedback

input = 3,600sec.hr.15sec.rev.×5ft.3rev.×(10Psig+14.28Psi14.73Psia)×1,000Btuft.33,600sec.hr.15sec.rev.×5ft.3rev.×(10Psig+14.28Psi14.73Psia)×1,000Btuft.3

The correct answer is: 1977600

Question 7

Question text

Determine the input to the appliance if:

- **Seconds per revolution = 17**
- **Gas temperature = 22°F**
- **Test dial = 5 Ft.3Ft.3**
- **Gas = Natural**
- **Local Atmospheric Pressure = 14.56 Psi**
- **Meter Pressure = 20 Psi**
- **Meter not temperature compensated**

Input = Answer 2475720 **Btuh**

Feedback

Input

= 3,600sec.hr.17sec.rev.×5ft.3hr.×(20Psig+14.56Psi14.73Psia)×(60F+46022F+460)×1,000Btuft.33,600sec.hr.17sec.rev.×5ft.3hr.×(20Psig+14.56Psi14.73Psia)×(60F+46022F+460)×1,000Btuft.3

The correct answer is: 2680236

Question text

Given a closed container in which there is 16 cubic feet of air at 35 Psig, what will the volume of air be if water is forced into the container until the pressure becomes 105 Psig?

V2V2 = Answer **ft.3ft.3**

Feedback

V2=V1P1P2V2=V1P1P2

V2=16ft.3×(35Psig+14.73psi)(105psig+14.73psi)V2=16ft.3×(35Psig+14.73psi)(105psig+14.73psi)

The correct answer is: 6.65

Question text

What will the volume be if the 920 cubic inches of gas is cooled from 16°C to -7°C ? (to 2 decimals)

V2V2 = Answer 848.49 **in.3in.3**

Feedback

V2=V1T2T1V2=V1T2T1

V2=920in.3×(−7°C+273)(16°C+273)V2=920in.3×(−7°C+273)(16°C+273)

The correct answer is: 846.78

Question text

If 310 cubic feet of oxygen is under a pressure of 50 Psig, to what gauge pressure must the gas be compressed so that it fits into a 15 cubic foot cylinder? (to 2 decimals)

P2P2 = Answer 4 **psigpsig**

Feedback

P2=V1P1V2P2=V1P1V2

P2=310ft.3×(50psig+14.73psi)15ft.3P2=310ft.3×(50psig+14.73psi)15ft.3

P2=1,337.75psia−14.73psiP2=1,337.75psia−14.73psi

The correct answer is: 1323.02

Question text

An 8 cubic foot air chamber at 40 Psig is released into the atmosphere. What volume will the released air have? (to 2 decimals)

V2V2 Answer 29.77 **ft.3ft.3**

Feedback

V2=V1P1P2V2=V1P1P2

V2=8ft.3×(40psig+14.73psi)14.73PsiaV2=8ft.3×(40psig+14.73psi)14.73Psia

The correct answer is: 29.72

Question text

A gas measures 920 cubic inches at 60°F. What is its volume at 93°F?

V2V2 = Answer 865.09 **in.3in.3**

Feedback

V2=V1T2T1V2=V1T2T1

V2=920in.3×(93F+460)(60F+460)V2=920in.3×(93F+460)(60F+460)

The correct answer is: 978.38

Question text

Which of the following is the combined gas law formula?

Select one:

a.

V1T1P1=V2T2P2V1T1P1=V2T2P2

b.

V1P1T1=V2P2T2V1P1T1=V2P2T2

c.

V1P1T1=V2P2T2V1P1T1=V2P2T2

d.

T1P1V1=T2P2V2T1P1V1=T2P2V2

Feedback

Your answer is incorrect.

The correct answer is: V1P1T1=V2P2T2V1P1T1=V2P2T2

Question text

All gases expand the same amount when heated one degree.

Select one:

True

False

Feedback

The correct answer is 'True'.

Question text

The test dials are timed on a gas meter that is recording a flow rate of gas at pressures more than 1/2 Psi (3.45 kPa). If no allowance is made for the compression of the gas because of the pressure, the volume of flow indicated by the test dials will:

Select one:

a.

indicate the exact Btu input to the combustion chamber

b.

indicate the unit is overfired

c.

be the volume of fuel gas expressed in SCFH entering the combustion chamber

d.

indicate the unit is underfired

Feedback

Your answer is incorrect.

The correct answer is: indicate the unit is underfired

Question text

The correction factor of 1.679 would be used for a system operating at:

Select one:

a.

5 psig (34 kPa)

b.

10 psig (70 kPa)

c.

20 psig (140 kPa)

d.

2 psig (14 kPa)

Feedback

Your answer is incorrect.

PCF=MeterPressure+LocalAtmosphericPressureStandardPressurePCF=MeterPressure+LocalAtmosphericPressureStandardPressure

MeterPressure=PCF×StandardPressure−LocalAtmosphericPressureMeterPressure=PCF×StandardPressure−LocalAtmosphericPressure

MeterPressure=1.679×14.73psia−14.73psiaMeterPressure=1.679×14.73psia−14.73psia

MeterPressure=10psigMeterPressure=10psig

The correct answer is: 10 psig (70 kPa)

Question 17

Question text

calculate the input to an appliance by using the following information:

- Local atmospheric pressure = 14.60 Psi
- Gas service line pressure = 60 Psig
- Gas pressure through the meter = 10 Psig
- House line pressure = 2 Psig
- Appliance manifold pressure = 5 inches water column
- Test dial = 0.05 m3m3

Test dial completes one revolution in 1 minute. Calorific value of gas = 1,000 Btu/Ft.3)(10.35\(kW/m3Btu/Ft.3)(10.35\(kW/m3). The correct input is closest to which one of the following?

Select one:

a.

177,000 Btu/h (51.8 kW)

b.

536,000 Btu/h (156.9 kW)

c.

300,000 Btu/h (87.9 kW)

d.

106,000 Btu/h (31 kW)

Feedback

Your answer is incorrect.

3,600sec.hr.60sec.rev.×0.05m3rev.×(10psig+14.6psi14.73psia)×35,310Btum3=176,903Btuh3,600sec.hr.60sec.rev.×0.05m3rev.×(10psig+14.6psi14.73psia)×35,310Btum3=176,903Btuh

The correct answer is: 177,000 Btu/h (51.8 kW)

Question text

Calculate the clocked input to the following boiler. The boiler has a rated input of 1,000,000 Btu/h (292.2 kW). it has four burners and operates at a manifold pressure of 7 inches water column (1.74 kPa). The fuel is natural gas with a calorific value of 1,050 Btu/Ft.3Btu/Ft.3 (10.84 kW/m3kW/m3). The building is at sea level (14.73 Psi) and is supplied with 5 Psig (34 kPa) at the meter. One revolution of the 0.1 m3m3 test dial takes 26 seconds. The clocked input of the boiler is closest to which one of the following?

Select one:

a.
520,000 Btu/h (152 kW)

b.
688,000 Btu/h (201 kW)

c.
490,000 Btu\h (143 kW)

d.
750,000 Btu/h (220 kW)

Feedback

Your answer is incorrect.

3,600sec.hr.26sec.rev.×0.1m3rev.×35.31ft.3m3×(5psig+14.73psi14.73psia)×1,050Btuft.3=687,380Btuh3,600sec.hr.26sec.rev.×0.1m3rev.×35.31ft.3m3×(5psig+14.73psi14.73psia)×1,050Btuft.3=687,380Btuh

The correct answer is: 688,000 Btu/h (201 kW)

Question text

Calculate the input to a burner that is fired on a 50% butane-air mixture if it takes 48 seconds for the 2 ft.3ft.3 test dial to complete one revolution. The gas meter has an operating pressure of 5 Psig:

Select one:

a.
240,000 Btuh

b.
480,000 Btuh

c.
643,000 Btuh

d.
321,000 Btuh

Feedback

Your answer is incorrect.

3,600sec.hr.48sec.rev.×2ft.3rev.×(5psig+14.73psi14.73psia)×1,600Btuft.3=321,360Btuh3,600sec.hr.48sec.rev.×2ft.3rev.×(5psig+14.73psi14.73psia)×1,600Btuft.3=321,360Btuh

The correct answer is: 321,000 Btuh

Question text

Determine the input to a appliance under the following conditions (choose the closest answer):

- Service pressure = 60 Psig
- Local atmospheric pressure = 13.38 Psi
- Seconds/revolution = 18
- Meter pressure = 5 psig
- manifold pressure =7 inches water column
- Test dial = 0.05 m3/rev.m3/rev.
- Building line pressure = 2 Psig
- Truck in the driveway = Green
- Weather = Partly Cloudy
- Gas = 1,050 Btu/Ft.3Btu/Ft.3

Select one:

a.

496,000 Btuh

b.

463,000 Btuh

c.

420,000 Btuh

d.

131,000 Btuh

Feedback

Your answer is incorrect.

3,600sec.hr.18sec.rev.×0.05m3rev.×(5Psig+13.38Psi14.73Psia)×35.31ft.3m3×1,050Btuft.3=462,702Btuh3,600sec.hr.18sec.rev.×0.05m3rev.×(5Psig+13.38Psi14.73Psia)×35.31ft.3m3×1,050Btuft.3=462,702Btuh

The correct answer is: 463,000 Btuh

Question text

Calculate the input (to the closest answer) using the following information:

- Service Pressure = 60 Psig
- Meter pressure = 5 Psig
- Manifold pressure = 3.5 inches water column
- Test dial size = (5 cubic ft)
- Seconds/revolution = 20
- Calorific value = 1,000 Btu/Ft.3Btu/Ft.3

Select one:

a.

1,205,000 Btuh

b.

4,566,000 Btuh

c.

6,300,000 Btuh

d.

900,000 Btuh

Feedback

Your answer is incorrect.

3,600sec.hr.20sec.rev.×5ft.3rev.×(5Psig+14.73Psi14.73Psia)×1,000Btuft.3=1,205,100Btuh3,600sec.hr.20sec.rev.×5ft.3rev.×(5Psig+14.73Psi14.73Psia)×1,000Btuft.3=1,205,100Btuh

The correct answer is: 1,205,000 Btuh

Question text

An appliance is clocked on a 2 Psi meter set without correcting for the pressure. The result will be:

Select one:

a.

the appliance clocked input will be correct

b.

there is no need to clock any appliance if 2 Psi gas is used

c.

the appliance will appear to be overfired

d.

the appliance will appear to be underfired

Feedback

Your answer is incorrect.

The correct answer is: the appliance will appear to be underfired

How much Methane does Natural gas contain as a percentage (%) ?

Select one:

a.

80 to 95 %

b.

50 to 60%

c.

60 to 70 %

d.

100%

Feedback

Your answer is correct.

The correct answer is: 80 to 95 %

Question text

Is natural gas in its pure state a toxic gas? (type yes or no) Answer no

Feedback

The correct answer is: No

Question text

For the following questions you can type in the chemical formulas as follows (eg water = H2o) do not include spaces in your answers.

List the chemical formula for Natural Gas. Answer ch4

Feedback

The correct answer is: CH4

Question text

List the chemical formula for Propane. Answer c3h8

Feedback

The correct answer is: C3H8

Question text

List the chemical formula for Butane. Answer c4h10

Feedback

The correct answer is: C4H10

Question text

List the chemical formula for Carbon monoxide. Answer co2

Feedback

The correct answer is: CO

Question text

List the chemical formula for Carbon dioxide. Answer co2

Feedback

The correct answer is: CO2

Question text

List the chemical formula for Methane. Answer mo

Feedback

The correct answer is: CH4

Question text

List the chemical formula for Oxygen. Answer o2

Feedback

The correct answer is: O2

Question text

The ratio of the weight of a given volume of gas to the weight of an equal volume of air measured at standard temperature and pressure (60°F @ 14.73 Psi or 15°C @ 101.325 kPa). This is a description of...

Select one:

a.

Relative Heat

b.

Weight of a substance compared to the density of Hg

c.

Relative Volume

d.

Relative Density

Feedback

Your answer is incorrect.

The correct answer is: Relative Density

Question text

The total heat energy produced when a given volume of fuel is subjected to combustion.

Select one:

a.

Specific Heat

b.

Calorific Capacity

c.

Heating Value

d.

Combustion Capacity

Feedback

Your answer is incorrect.

The correct answer is: Heating Value

Question text

When one cubic foot of natural gas is burned it will produce Answer 1000 British Thermal Units.

Feedback

The correct answer is: 1000

Question text

Having any lesser amount of fuel than the lower flammable limit, a mixture would be Answer less and would not burn.

Feedback

The correct answer is: lean

Question text

Which of the following is used to odourize natural gas?

Select one:

a.

Sulphur

b.

Citric Acid

c.

Onion Oil

d.

Mercaptan

Feedback

Your answer is incorrect.

The correct answer is: Mercaptan

Question text

Natural gas must be readily detectable when _____ of the fuel gas per volume is present.

Select one:

a.

less than 10%

b.

more than 10%

c.

less than 1%

d.

any amount

Feedback

Your answer is incorrect.

The correct answer is: less than 1%

Question text

At standard atmospheric pressure, 14.73 Psi (101.325 kPa), the boiling point of propane is Answer 2500 . Answer in Fahrenheit as ###F (including the letter "F") .

Feedback

-44 F

or

-42 C

The correct answer is: -44F

Question text

Fuel gases are usually transported and stored in liquid state rather than as a gas due to the following:

(C3H8) 270 times more fuel can be stored in the same space.

(C4H10) 235 times more fuel can be stored in the same space.

Select one:

True

False

Feedback

The correct answer is 'True'.

Question text

The limits of flammability of propane gas in air are approximately:

Select one:

a.

2.5% to 9.5%

b.

4.6% to 14%

c.

5% to 15.3%

d.

10% to 45%

Feedback

Your answer is correct.

The correct answer is: 2.5% to 9.5%

Question text

Identify the limits of flammability for natural gas in air:

Select one:

a.

6% to 12%

b.

14% to 24%

c.

4% to 10%

d.

4% to 14%

Feedback

Your answer is correct.

The correct answer is: 4% to 14%

Question text

Natural gas is composed mainly of:

Select one:

a.

propane

b.

butane

c.

methane

d.

carbon dioxide

Feedback

Your answer is correct.

The correct answer is: methane

Question text

The relative density of propane vapour is approximately:

Select one:

a.

1.5

b.

0.8

c.

0.6

d.

2.0

Feedback

Your answer is correct.

The correct answer is: 1.5

Question text

What is the calorific value of Butane gas?

Select one:

a.

1,200Btu/Ft.3(.352kW/Ft.3)1,200Btu/Ft.3(.352kW/Ft.3)

b.

1,050Btu/Ft.3(.308kW/Ft.3)1,050Btu/Ft.3(.308kW/Ft.3)

c.

3,200Btu/Ft.3(.938kW/Ft.3)3,200Btu/Ft.3(.938kW/Ft.3)

d.

2,500Btu/Ft.3(.733kW/Ft.3)2,500Btu/Ft.3(.733kW/Ft.3)

Feedback

Your answer is correct.

The correct answer is: 3,200Btu/Ft.3(.938kW/Ft.3)3,200Btu/Ft.3(.938kW/Ft.3)

Question text

The heat generated by the complete combustion of a unit of fuel is commonly referred to as its:

Select one:

a.

distillation value

b.

combustion value

c.

flash value

d.

calorific value

Feedback

Your answer is correct.

The correct answer is: calorific value

Question text

Which of the following gases has the highest calorific value?

Select one:

a.

Natural Gas

b.

Carbon monoxide

c.

Butane

d.

Propane

Feedback

Your answer is correct.

The correct answer is: Butane

Question text

Natural gas must be preheated to approximately _____ °F before it will ignite.

Select one:

a.

3,500

b.

212

c.

1,200

d.

1,000

Feedback

Your answer is correct.

The correct answer is: 1,200

Question text

The flame temperature of natural gas is approximately _____ °F.

Select one:

a.

212

b.

1,000

c.

3,500

d.

1,200

Feedback

Your answer is incorrect.

The correct answer is: 3,500

Question text

The calorific value (heat value) of natural gas is approximately:

Select one:

a.

1,000Btu/Ft.3(10.35kW/m3)1,000Btu/Ft.3(10.35kW/m3)

b.

2,500Btu/Ft.3(26kW/m3)2,500Btu/Ft.3(26kW/m3)

c.

3,200Btu/Ft.3(33kW/m3)3,200Btu/Ft.3(33kW/m3)

d.

500Btu/Ft.3(5.17kW/m3)500Btu/Ft.3(5.17kW/m3)

Feedback

Your answer is correct.

The correct answer is: 1,000Btu/Ft.3(10.35kW/m3)1,000Btu/Ft.3(10.35kW/m3)

Question 28

Question text

The specific gravity of a gas is the:

Select one:

a.

weight of a gas as compared to an equal volume of air

b.

heat in the gas

c.

weight of a gas as compared to an equal volume of water

d.

volume of the gas

Feedback

Your answer is incorrect.

The correct answer is: weight of a gas as compared to an equal volume of air

Skip to main content

Side panel

Question text

How much Methane does Natural gas contain as a percentage (%) ?

Select one:

a.

80 to 95 %

b.

50 to 60%

c.

60 to 70 %

d.

100%

Feedback

Your answer is correct.

The correct answer is: 80 to 95 %

Question text

Is natural gas in its pure state a toxic gas? (type yes or no) Answer no

Feedback

The correct answer is: No

Question **3**

Question text

For the following questions you can type in the chemical formulas as follows (eg water = H2o) do not include spaces in your answers.

List the chemical formula for Natural Gas. Answer ch4

Feedback

The correct answer is: CH4

Question text

List the chemical formula for Propane. Answer c3h8

Feedback

The correct answer is: C3H8

Question text

List the chemical formula for Butane. Answer c4h10

Feedback

The correct answer is: C4H10

Question text

List the chemical formula for Carbon monoxide. Answer co2

Feedback

The correct answer is: CO

Question text

List the chemical formula for Carbon dioxide. Answer co2

Feedback

The correct answer is: CO2

Question text

List the chemical formula for Methane. Answer mo

Feedback

The correct answer is: CH4

Question text

List the chemical formula for Oxygen. Answer o2

Feedback

The correct answer is: O2

Question text

The ratio of the weight of a given volume of gas to the weight of an equal volume of air measured at standard temperature and pressure (60ºF @ 14.73 Psi or 15ºC @ 101.325 kPa). This is a description of...

Select one:

a.

Relative Heat

b.

Weight of a substance compared to the density of Hg

c.

Relative Volume

d.

Relative Density

Feedback

Your answer is incorrect.

The correct answer is: Relative Density

Question **11**

Question text

The total heat energy produced when a given volume of fuel is subjected to combustion.

Select one:

a.

Specific Heat

b.

Calorific Capacity

c.

Heating Value

d.

Combustion Capacity

Feedback

Your answer is incorrect.

The correct answer is: Heating Value

Question text

When one cubic foot of natural gas is burned it will produce Answer 1000 British Thermal Units.

Feedback

The correct answer is: 1000

Question **13**

Question text

Having any lesser amount of fuel than the lower flammable limit, a mixture would be Answer less and would not burn.

Feedback

The correct answer is: lean

Question text

Which of the following is used to odourize natural gas?

Select one:

a.

Sulphur

b.

Citric Acid

c.

Onion Oil

d.

Mercaptan

Feedback

Your answer is incorrect.

The correct answer is: Mercaptan

Question text

Natural gas must be readily detectable when _____ of the fuel gas per volume is present.

Select one:

a.

less than 10%

b.

more than 10%

c.

less than 1%

d.

any amount

Feedback

Your answer is incorrect.

The correct answer is: less than 1%

Question text

At standard atmospheric pressure, 14.73 Psi (101.325 kPa), the boiling point of propane is Answer 2500 . Answer in Fahrenheit as ###F (including the letter "F") .

Feedback

-44 F

or

-42 C

The correct answer is: -44F

Question text

Fuel gases are usually transported and stored in liquid state rather than as a gas due to the following:

(C3H8) 270 times more fuel can be stored in the same space.

(C4H10) 235 times more fuel can be stored in the same space.

Select one:

True

False

Feedback

The correct answer is 'True'.

Question text

The limits of flammability of propane gas in air are approximately:

Select one:

a.

2.5% to 9.5%

b.

4.6% to 14%

c.

5% to 15.3%

d.

10% to 45%

Feedback

Your answer is correct.

The correct answer is: 2.5% to 9.5%

Question text

Identify the limits of flammability for natural gas in air:

Select one:

a.

6% to 12%

b.

14% to 24%

c.

4% to 10%

d.

4% to 14%

Feedback

Your answer is correct.

The correct answer is: 4% to 14%

Question text

Natural gas is composed mainly of:

Select one:

a.

propane

b.

butane

c.

methane

d.

carbon dioxide

Feedback

Your answer is correct.

The correct answer is: methane

Question text

The relative density of propane vapour is approximately:

Select one:

a.

1.5

b.

0.8

c.

0.6

d.

2.0

Feedback

Your answer is correct.

The correct answer is: 1.5

Question text

What is the calorific value of Butane gas?

Select one:

a.

1,200Btu/Ft.3(.352kW/Ft.3)1,200Btu/Ft.3(.352kW/Ft.3)

b.

1,050Btu/Ft.3(.308kW/Ft.3)1,050Btu/Ft.3(.308kW/Ft.3)

c.

3,200Btu/Ft.3(.938kW/Ft.3)3,200Btu/Ft.3(.938kW/Ft.3)

d.

2,500Btu/Ft.3(.733kW/Ft.3)2,500Btu/Ft.3(.733kW/Ft.3)

Feedback

Your answer is correct.

The correct answer is: 3,200Btu/Ft.3(.938kW/Ft.3)3,200Btu/Ft.3(.938kW/Ft.3)

Question text

The heat generated by the complete combustion of a unit of fuel is commonly referred to as its:

Select one:

a.

distillation value

b.

combustion value

c.

flash value

d.

calorific value

Feedback

Your answer is correct.

The correct answer is: calorific value

Question text

Which of the following gases has the highest calorific value?

Select one:

a.

Natural Gas

b.

Carbon monoxide

c.

Butane

d.

Propane

Feedback

Your answer is correct.

The correct answer is: Butane

Question text

Natural gas must be preheated to approximately _____ ºF before it will ignite.

Select one:

a.

3,500

b.

212

c.

1,200

d.

1,000

Feedback

Your answer is correct.

The correct answer is: 1,200

Question text

The flame temperature of natural gas is approximately _____ ºF.

Select one:

a.

212

b.

1,000

c.

3,500

d.

1,200

Feedback

Your answer is incorrect.

The correct answer is: 3,500

Question text

The calorific value (heat value) of natural gas is approximately:

Select one:

a.

1,000Btu/Ft.3(10.35kW/m3)1,000Btu/Ft.3(10.35kW/m3)

b.

2,500Btu/Ft.3(26kW/m3)2,500Btu/Ft.3(26kW/m3)

c.

3,200Btu/Ft.3(33kW/m3)3,200Btu/Ft.3(33kW/m3)

d.

500Btu/Ft.3(5.17kW/m3)500Btu/Ft.3(5.17kW/m3)

Feedback

Your answer is correct.

The correct answer is: 1,000Btu/Ft.3(10.35kW/m3)1,000Btu/Ft.3(10.35kW/m3)

Question text

The specific gravity of a gas is the:

Select one:

a.

weight of a gas as compared to an equal volume of air

b.

heat in the gas

c.

weight of a gas as compared to an equal volume of water

d.

volume of the gas

Feedback

Your answer is incorrect.

The correct answer is: weight of a gas as compared to an equal volume of air

The major interruption in fuel supply could stop production and result in what?

Select one:

a.

Minor economic losses

b.

Major economic losses

c.

Not a big deal

d.

Inconvenience

Feedback

Your answer is incorrect.

The correct answer is: Major economic losses

Question text

When is it practical to consider Bio-gas as a supplemental fuel source?

Select one:

a.

When supply exceeds demand

b.

When demand exceeds supply

c.

Bio-gas is hazardous and should never be used

d.

It is never practical

Feedback

Your answer is incorrect.

The correct answer is: When demand exceeds supply

Question text

When organic waste degrades what does it produce?

Select one:

a.

Water

b.

Energy

c.

Methane

d.

Carbon Dioxide

Feedback

Your answer is incorrect.

The correct answer is: Methane

Question text

What is the process of bacteria digesting organic material referred to as?

Select one:

a.

Energetic activity

b.

Aerobic activity

c.

Anaerobic digestion

d.

Process Digestion

Feedback

Your answer is incorrect.

The correct answer is: Anaerobic digestion

Question text

What is term used to describe separating methane from the bio-gas?

Select one:

a.

Scrubbing

b.

Manufacturing

c.

Sweeping

d.

Bleaching

Feedback
Your answer is incorrect.

The correct answer is: Scrubbing

Question text
Calculate the calorific value of a propane/air mixture with 65% propane.

Select one:

a.

1 500 Btu/cubic foot

b.

1 235 Btu/cubic foot

c.

1 750 Btu/cubic foot

d.

1 625 Btu/cubic foot

Feedback
Your answer is incorrect.

The correct answer is: 1 625 Btu/cubic foot

Question **7**

Question text
Calculate the specific gravity of a propane/air mixture with 65% propane.

Select one:

a.

1.342

b.

1.182

c.

1.338

d.

1.765

Feedback

Your answer is incorrect.

(65/100 x 1.52) + (35/100 x 1) = 1.338

The correct answer is: 1.338

Which type of gas meter would be suited for applications requiring a gas pressure rating of 300 or more PSIG?

Select one:

a.

Rotary meter

b.

Diaphragm meter

c.

Turbine meter

d.

All meters can easily handle 300 PSIG or more

Feedback
Your answer is incorrect.

The correct answer is: Turbine meter

Question text
Which type of gas meter is used mostly in residential markets?

Answer: Diaphragm meter

Feedback
Diaphragm or Bellows

The correct answer is: Diaphragm

Question text
Which of the following is not a function of the gas meter ?

Select one:

a.

Measuring input to appliances within building

b.

Measuring Gas consumption

c.

Identifying leaks

d.

Measuring Gas pressure

Feedback
Your answer is incorrect.

The correct answer is: Measuring Gas pressure

Question text
If no appliances in the building are firing and the gas meter is moving what can be assumed ?

Select one:

a.

The line pressure regulator has been left on

b.

The gas meter is faulty

c.

The service regulator has failed

d.

There is a leak somewhere in the system

Feedback

Your answer is incorrect.

The correct answer is: There is a leak somewhere in the system

Question text

The main purpose of a gas meter is to:

Select one:

a.

measure and record the gas flow

b.

restrict the flow of gas to the system

c.

prevent excessive gas flow to the system

d.

test the system for leaks

Feedback
Your answer is correct.

The correct answer is: measure and record the gas flow

Question text
Bellows-type gas meters are installed on:

Select one:

a.

domestic and commercial systems

b.

domestic system only

c.

industrial and commercial system

d.

industrial systems only

Feedback
Your answer is correct.

The correct answer is: domestic and commercial systems

Question text
Diaphragm meters can typically service systems up to a maximum flow capacity of _____.

Select one:

a.

15 000 CFH

b.

1000 CFH

c.

5000 CFH

d.

1500 CFH

Feedback

Your answer is correct.

The correct answer is: 5000 CFH

Question **8**

Question text

Test dials on meters can be used to do which of the following.

Select one:

a.

To test for leaks in the system.

b.

To test the meter for proper operation.

c.

To monitor and record flow rate.

d.

To determine the amount of gas consumed over a large period of time.

Feedback

Your answer is correct.

The correct answer is: To test for leaks in the system.

What are the acceptable range limits when comparing CLOCKED inputs to the manufacturer's RATED inputs ?

Select one:

a.
+/- 20 %

b.
10 % under-fired / 0 % over-fired

c.
10 % over-fired / 0 % under-fired

d.
0 % over-fired / 0 % over-fired

Feedback

Your answer is correct.

The correct answer is: 10 % under-fired / 0 % over-fired

Question text

Which of the following is the low pressure clocking formula ?

Select one:

a.
3600 secs / hr x test dial volume x calorific value / clocked input

b.
3600 secs / hr x test dial volume x calorific value / rated input

c.
sec / rev. x test dial volume x calorific value / 3600 sec / hr

d.
3600 secs / hr x test dial volume x calorific value / # sec / rev.

Feedback

Your answer is incorrect.

The correct answer is: 3600 secs / hr x test dial volume x calorific value / # sec / rev.

Question text

If a natural gas meter @ 7 inches water column pressure is used to clock an appliance and it takes 23 seconds for the 2 cubic foot test dial to make one revolution. What is the clocked input of this appliance if the calorific value of the gas is 1050 Btu's / feet^3 ? (To nearest whole number)

Answer: 328695

Feedback

3600 sec / hour ÷ 23 sec / rev. x 2 feet ^{3} x 1050 Btu's ^{3} / feet ^{3}

The correct answer is: 328696

Question text

The testing pressure and duration of the test for gas piping systems after appliances are connected is:

Select one:

a.
50 psi for 10 minutes

b.
normal working pressure for 24 hours

c.
1/2 Psi for 10 minutes

d.
normal working pressure for 10 minutes

Feedback

Your answer is correct.

B149.1 [6.22.3 (b & d)]

The correct answer is: normal working pressure for 10 minutes

Question text

A furnace fired on natural gas is clocked at 20 seconds for one revolution of a 0.05 cubic meter test dial. The pressure of the gas in the meter is 7 inches water column (1.74 kPa). Calorific value = 1,000 $BtuFt._3$BtuFt.3 (10.35 kW/m 3). The correct input is closest to:

Select one:

a.
93.15 Btu/h (0.027 kW)

b.
9,000 Btu/h (2.63 kW)

c.
320,000 Btu/h (93.6 kW)

d.
90,000 Btu/h (26.4 kW)

Feedback

Your answer is incorrect.

3,600sec.hr.20sec.rev.×0.05m3rev.=9m3hr3,600sec.hr.20sec.rev.×0.05m3rev.=9m3hr
9m3hr.×35,310Btum3=317,790Btuh9m3hr.×35,310Btum3=317,790Btuh

The correct answer is: 320,000 Btu/h (93.6 kW)

Question text

A 5 cubic foot test dial on a low pressure meter takes 30 seconds to make 1 complete revolution. The correct flow rate is closest to:

Select one:

a.
600 cubic feet/hour (16.80 m3m3)

b.
120 cubic feet/hour (3.36 m3m3)

c.
30 cubic feet/hour (0.85 m3m3)

d.
750 cubic feet/hour (21.24 m3m3)

Feedback

Your answer is correct.

3,600sec.hr.30sec.rev.×5ft.3rev.=600CFH3,600sec.hr.30sec.rev.×5ft.3rev.=600CFH

The correct answer is: 600 cubic feet/hour (16.80 m3m3)

Question text

A low pressure meter set requires 32 seconds for a 0.05 m3m3 test dial to make one revolution. The calorific value of the gas is 1,000 BtuFt.3BtuFt.3 . The closest correct input is:

Select one:

a.
582,000 Btu/h

b.
1,986,948 Btu/h

c.

199,000 Btu/h

d.
56,250 Btu/h

Feedback

Your answer is incorrect.

3,600sec.hr.32sec.rev.×0.05m3rev.=5.625m3hr.3,600sec.hr.32sec.rev.×0.05m3rev.=5.625m3hr.
5.625m3hr.×35,310Btum3=198,619Btuh5.625m3hr.×35,310Btum3=198,619Btuh

The correct answer is: 199,000 Btu/h

Question text

A low pressure propane meter with a 1 cubic foot dial takes 25 seconds for a revolution. The correct input is closest to:

Select one:

a.
325,451 Btu/h (95.32 kW)

b.
403,200 Btu/h (118.09 kW)

c.
360,000 Btu/h (105.44 kW)

d.
151,200 btu/h (44.28 kW)

Feedback

Your answer is correct.

3,600sec.hr.25sec.rev.×1ft.3rev.=144CFH3,600sec.hr.25sec.rev.×1ft.3rev.=144CFH
144CFH×2,500Btuft.3=360,000Btuh144CFH×2,500Btuft.3=360,000Btuh

The correct answer is: 360,000 Btu/h (105.44 kW)

Question text

A furnace rated at 250,000 Btu/h (73.23 kW) is fired on natural gas. The calorific value = 1,000 BtuFt.3BtuFt.3 (10.35 kWm3kWm3). How long will it take the 5 cubic foot test dial to make one complete revolution on this low pressure meter?

Select one:

a.
180 seconds

b.
18 seconds

c.
100 seconds

d.
72 seconds

Feedback

Your answer is incorrect.

input=$3{,}600_{sec.hr.} \times TD \times C.V. T_{sec.rev.}$input=3,600sec.hr.×TD×C.V.Tsec.rev.
$T_{sec.rev.} = 3{,}600_{sec.hr.} \times 5_{ft.3rev.} \times 1{,}000_{Btuft.3} 250{,}000_{Btuh}$Tsec.rev.=3,600sec.hr.×5ft.3rev.×1,000Btuft.3250,000Btuh

The correct answer is: 72 seconds

Question text

Calculate the input for the following natural gas appliance:

- Calorific value of gas = 1,000 $_{BtuFt.3}$BtuFt.3 (10.35 $_{kWm3}$kWm3)
- Meter pressure = 7 inches water column (1.74 kPa)
- Manifold pressure = 5 inches water column (1.24 kPa)
- Local atmospheric pressure = 14.68 Psia
- Test dial = 1 $Ft.^3$
- One revolution of the test dial takes 31.5 seconds

Select one:

a.
115,428 Btu/h (33.81 kW)

b.
114,285 Btu/h (33.47 kW)

c.
119,999 Btu/h (35.15 kW)

d.
116,129 Btu/h (34.01 kW)

Feedback

Your answer is correct.

3,600sec.rev.31.5sec.rev.×1ft.3rev.×1,000Btuft.3=114,286Btuh3,600sec.rev.31.5sec.rev.×1ft.3rev.×1,000Btuft.3=114,286Btuh

The correct answer is: 114,285 Btu/h (33.47 kW)

Question text

The purpose of clocking a meter by a gas fitter is:

Select one:

a.
solely used as a gas leak check

b.
to check how much gas is consumed in a month for billing purposes

c.
to see how long it takes the test dial to go around

d.
to determine how much gas an appliance consumes per hour

Feedback

Your answer is correct.

The correct answer is: to determine how much gas an appliance consumes per hour

Question text

Determine the number of seconds for one revolution of a 2 cubic foot test dial if the input is 302,400 Btuh, the meter pressure is 7 inches water column and the gas used has a calorific value of 1,050 BtuFt.3BtuFt.3.

Select one:

a.
4 seconds

b.
25 seconds

c.
28.5 seconds

d.
23.8 seconds

Feedback

Your answer is correct.

3,600sec.hr.×2ft.3rev.×1,050Btuft.3302,400Btuh=25sec.3,600sec.hr.×2ft.3rev.×1,050Btuft.3302,400Btuh=25sec.

The correct answer is: 25 seconds

Question text

A furnace fired on propane is clocked at 22 seconds on a 0.5 Ft.3Ft.3 test dial. The meter is low pressure. Its input will be closest to:

Select one:

a.
2,045,000 Btuh

b.
82,000 Btuh

c.
818,000 Btuh

d.
204,545 Btuh

Feedback

Your answer is correct.

3,600sec.hr.22sec.rev.×0.5ft.3rev.×2,500Btuft.3=204,545Btuh3,600sec.hr.22sec.rev.×0.5ft.3rev.×2,500Btuft.3=204,545Btuh

The correct answer is: 204,545 Btuh

Question text

A low pressure meter set measuring natural gas requires 32 seconds for a 1/2 cubic meter test dial to make one revolution. The correct input is closest to:

Select one:

a.
56.25 kW

b.
582 kW

c.
56,250 kW

d.
582 Btuh

Feedback

Your answer is incorrect.

$3{,}600_{sec.hr.}32_{sec.rev.}\times 0.5 m^3_{rev.}=56.25 m^3_{hr.}$ 3,600sec.hr.32sec.rev.×0.5m3rev.=56.25m3hr.
$56.25 m^3_{hr.}\times 10.35 kW m^3=582.188 kW_{hr.}$ 56.25m3hr.×10.35kWm3=582.188kWhr.

The correct answer is: 582 kW

Question text

After replacing a hot water tank rated at 36,000 Btuh, the gas fitter must clock it. However, the furnace must stay on throughout the clocking procedure. Clocking only the furnace (rated at 120,000 Btuh), the test dial takes 150 seconds for one revolution (5 $Ft.^3$ Ft.3 test dial). With both units firing, the time per revolution drops to 116 seconds. Using natural gas, if the meter is a low-pressure meter, we can conclude that:

Select one:

a.
the hot water tank is overfired

b.
both units are underfired

c.
the installation is acceptable

d.
the furnace is overfired

Feedback

Your answer is incorrect.

(Both Appliances) $3{,}600_{sec.hr.}116_{sec.rev.}\times 5 ft.^3_{rev.}\times 1{,}000 \frac{Btuh}{ft.^3}=155{,}172 Btuh$ 3,600sec.hr.116sec.rev.×5ft.3rev.×1,000Btuft.3=155,172Btuh
(Furnace) $3{,}600_{sec.hr.}150_{sec.rev.}\times 5 ft.^3_{rev.}\times 1{,}000 \frac{Btuh}{ft.^3}=120{,}000 Btuh$ 3,600sec.hr.150sec.rev.×5ft.3rev.×1,000Btuft.3=120,000Btuh
(Hot Water Tank) $155{,}172 Btuh-120{,}000 Btuh=35{,}172 Btuh$ 155,172Btuh−120,000Btuh=35,172Btuh

The correct answer is: the installation is acceptable

Question text

An appliance fired on low pressure natural gas takes 27 seconds for one revolution of a 0.05 m^3 m3 test dial. Its input will be closest to:

Select one:

a.
6.67 kW

b.
13.24 kW

c.
235,000 Btuh

d.
167,000 Btuh

Feedback

Your answer is incorrect.

$3{,}600_{sec.hr.} 27_{sec.rev.} \times 0.05 m3_{rev.} \times 35{,}310_{Btum3} = 235{,}400 Btuh$3,600sec.hr.27sec.rev.×0.05m3rev.×35,310Btum3=235,400Btuh3,600sec.hr.27sec.rev.×0.05m3rev.×35,310Btum3=235,400Btuh

The correct answer is: 235,000 Btuh

Question text

A furnace is certified to operate on propane with an input of 375,000 Btu/h at 10 inches water column. The gas has a calorific value of 2,500 Btu/Ft.3Btu/Ft.3. With the furnace operating, the meter is clocked and it takes 30 seconds for the 1 cubic foot test dial to make one complete revolution. From this, you can conclude that the appliance is:

Select one:

a.
firing at the correct input

b.
overfired by 20%

c.
underfired by 20%

d.
underfired by 80%

Feedback

Your answer is incorrect.

$3{,}600_{sec.hr.} 30_{sec.rev.} \times 1 ft.3_{rev.} \times 2{,}500 Btuft.3_{} 3{,}600 sec.hr. 30 sec.rev. \times 1 ft.3 rev. \times 2{,}500 Btuft.3$
$300{,}000 Btuh 375{,}000 Btuh = 80 300{,}000 Btuh 375{,}000 Btuh = 80\ \%$

Which of the following is the pressure correction factor formula?

Select one:

a. PCF=MeterPressure+LocalAtmosphericPressureStandardPressurePCF=MeterPressure+LocalAtmosphericPressureStandardPressure

b. PCF=MeterPressure×AbsolutePressureSeaLevelPressurePCF=MeterPressure×AbsolutePressureSeaLevelPressure

c. PCF=MeterPressure×StandardPressureLocalAtmosphericPressurePCF=MeterPressure×StandardPressureLocalAtmosphericPressure

d. PCF=MeterPressure+StandardPressureLocalAtmosphericPressurePCF=MeterPressure+StandardPressureLocalAtmosphericPressure

Feedback

Your answer is correct.

The correct answer is: PCF=MeterPressure+LocalAtmosphericPressureStandardPressurePCF=MeterPressure+LocalAtmosphericPressureStandardPressure

Question text

Which of the following is the temperature correction factor formula?

Select one:

a. TCF=GasTemp+460(273)StandardTemp+460(273)TCF=GasTemp+460(273)StandardTemp+460(273)

b. TCF=StandardTemp+460(273)StandardPressure+14.73TCF=StandardTemp+460(273)StandardPressure+14.73

c. TCF=StandardPressure+14.73StandardTemp+460(273)TCF=StandardPressure+14.73StandardTemp+460(273)

d. TCF=StandardTemp+460(273)GasTemp+460(273)TCF=StandardTemp+460(273)GasTemp+460(273)

Feedback

Your answer is correct.

The correct answer is: TCF=StandardTemp+460(273)GasTemp+460(273)TCF=StandardTemp+460(273)GasTemp+460(273)

Question text

Simply stated, Boyle's Law says that if the pressure exerted upon a gas increases, its volume will Answer decreases .

Feedback

The correct answer is: decrease

Flag question

Question text

Simply stated, Charles' Law says that if the temperature exerted upon a gas increases, its volume will Answer increase .

Feedback

The correct answer is: increase

Question text

Which type of meter has the correction factor stamped on a brass tag attached to the meter? Answer compensat

Feedback

The correct answer is: Pressure Factor Measurement

Question text

Clock the input using the following information:

- Test Dial = 5 Ft.3Ft.3
- Time for One Revolution = 15 seconds
- Gas = Natural
- Local Atmospheric Pressure = 14.28 Psi
- Meter Pressure = 10 Psi

Input = Answer 1597200 Btuh

Feedback

input = 3,600sec.hr.15sec.rev.×5ft.3rev.×(10Psig+14.28Psi14.73Psia)×1,000Btuft.33,600sec.hr.15sec.rev.×5ft.3rev.×(10Psig+14.28Psi14.73Psia)×1,000Btuft.3

The correct answer is: 1977600

Question text

Determine the input to the appliance if:

- Seconds per revolution = 17
- Gas temperature = 22ºF
- Test dial = 5 Ft.3Ft.3
- Gas = Natural
- Local Atmospheric Pressure = 14.56 Psi
- Meter Pressure = 20 Psi
- Meter not temperature compensated

Input = Answer 2475720 Btuh

Feedback

Input

$= 3{,}600_{sec.hr.} 17_{sec.rev.} \times 5 ft.^3 hr. \times (20 Psig + 14.56 Psi 14.73 Psia) \times (60F + 46022F + 460) \times 1{,}000 Btuft.^3$

3,600sec.hr.17sec.rev.×5ft.3hr.×(20Psig+14.56Psi14.73Psia)×(60F+46022F+460)×1,000Btuft.3

The correct answer is: 2680236

Question text

Given a closed container in which there is 16 cubic feet of air at 35 Psig, what will the volume of air be if water is forced into the container until the pressure becomes 105 Psig?

V_2V2 = Answer ft.3ft.3

Feedback

$V_2 = V_1 P_1 P_2$V2=V1P1P2

$V_2 = 16 ft.^3 \times (35 Psig + 14.73 psi)(105 psig + 14.73 psi)$V2=16ft.3×(35Psig+14.73psi)(105psig+14.73psi)

The correct answer is: 6.65

Question text

What will the volume be if the 920 cubic inches of gas is cooled from 16ºC to -7ºC ? (to 2 decimals)

V_2V2 = Answer 848.49 in.3in.3

Feedback

$V_2 = V_1 T_2 T_1$V2=V1T2T1

$V_2 = 920 in.^3 \times (-7ºC + 273)(16ºC + 273)$V2=920in.3×(−7ºC+273)(16ºC+273)

The correct answer is: 846.78

Question text

If 310 cubic feet of oxygen is under a pressure of 50 Psig, to what gauge pressure must the gas be compressed so that it fits into a 15 cubic foot cylinder? (to 2 decimals)

P_2P2 = Answer 4 psigpsig

Feedback

$P_2=V_1P_1V_2P2=V1P1V2$

$P_2=310ft.^3\times(50psig+14.73psi)15ft.^3P2=310ft.3\times(50psig+14.73psi)15ft.3$

$P_2=1,337.75psia-14.73psiP2=1,337.75psia-14.73psi$

The correct answer is: 1323.02

Question text

An 8 cubic foot air chamber at 40 Psig is released into the atmosphere. What volume will the released air have? (to 2 decimals)

V_2V2 Answer 29.77 $ft.^3ft.3$

Feedback

$V_2=V_1P_1P_2V2=V1P1P2$

$V_2=8ft.^3\times(40psig+14.73psi)14.73PsiaV2=8ft.3\times(40psig+14.73psi)14.73Psia$

The correct answer is: 29.72

Question text

A gas measures 920 cubic inches at 60ºF. What is its volume at 93ºF?

V_2V2 = Answer 865.09 $in.^3in.3$

Feedback

$V_2=V_1T_2T_1V2=V1T2T1$

$V_2=920in.^3\times(93F+460)(60F+460)V2=920in.3\times(93F+460)(60F+460)$

The correct answer is: 978.38

Question text

Which of the following is the combined gas law formula?

Select one:

a.

$V1T1P1=V2T2P2V1T1P1=V2T2P2$

b.

$V1P1T1=V2P2T2V1P1T1=V2P2T2$

c.

$V1P1T1=V2P2T2V1P1T1=V2P2T2$

d.

$T1P1V1=T2P2V2T1P1V1=T2P2V2$

Feedback

Your answer is incorrect.

The correct answer is: V1P1T1=V2P2T2V1P1T1=V2P2T2

Question text

All gases expand the same amount when heated one degree.

Select one:

- True
- False

Feedback

The correct answer is 'True'.

Question text

The test dials are timed on a gas meter that is recording a flow rate of gas at pressures more than 1/2 Psi (3.45 kPa). If no allowance is made for the compression of the gas because of the pressure, the volume of flow indicated by the test dials will:

Select one:

a.
indicate the exact Btu input to the combustion chamber

b.
indicate the unit is overfired

c.
be the volume of fuel gas expressed in SCFH entering the combustion chamber

d.
indicate the unit is underfired

Feedback

Your answer is incorrect.

The correct answer is: indicate the unit is underfired

Question text

The correction factor of 1.679 would be used for a system operating at:

Select one:

a.
5 psig (34 kPa)

b.
10 psig (70 kPa)

c.
20 psig (140 kPa)

d.
2 psig (14 kPa)

Feedback

Your answer is incorrect.

PCF=MeterPressure+LocalAtmosphericPressureStandardPressurePCF=MeterPressure+LocalAtmosphericPressureStandardPressure
MeterPressure=PCF×StandardPressure−LocalAtmosphericPressureMeterPressure=PCF×StandardPressure−LocalAtmosphericPressure
MeterPressure=1.679×14.73psia−14.73psiaMeterPressure=1.679×14.73psia−14.73psia
MeterPressure=10psigMeterPressure=10psig

The correct answer is: 10 psig (70 kPa)

Question text

calculate the input to an appliance by using the following information:

- Local atmospheric pressure = 14.60 Psi
- Gas service line pressure = 60 Psig
- Gas pressure through the meter = 10 Psig
- House line pressure = 2 Psig
- Appliance manifold pressure = 5 inches water column
- Test dial = 0.05 m3m3

Test dial completes one revolution in 1 minute. Calorific value of gas = 1,000 Btu/Ft.3)(10.35\(kW/m3Btu/Ft.3)(10.35\(kW/m3). The correct input is closest to which one of the following?

Select one:

a.
177,000 Btu/h (51.8 kW)

b.
536,000 Btu/h (156.9 kW)

c.
300,000 Btu/h (87.9 kW)

d.
106,000 Btu/h (31 kW)

Feedback

Your answer is incorrect.

3,600sec.hr.60sec.rev.×0.05m3rev.×(10psig+14.6psi14.73psia)×35,310Btum3=176,903Btuh3,600sec.hr.60sec.rev.×0.05m3rev.×(10psig+14.6psi14.73psia)×35,310Btum3=176,903Btuh

The correct answer is: 177,000 Btu/h (51.8 kW)

Marked out of 1.00

Question text

Calculate the clocked input to the following boiler. The boiler has a rated input of 1,000,000 Btu/h (292.2 kW). it has four burners and operates at a manifold pressure of 7 inches water column (1.74 kPa). The fuel is natural gas with a calorific value of 1,050 Btu/Ft.3Btu/Ft.3 (10.84 kW/m3kW/m3). The building is at sea level (14.73 Psi) and is supplied with 5 Psig (34 kPa) at the meter. One revolution of the 0.1 m3m3 test dial takes 26 seconds. The clocked input of the boiler is closest to which one of the following?

Select one:

a.
520,000 Btu/h (152 kW)

b.
688,000 Btu/h (201 kW)

c.
490,000 Btu\h (143 kW)

d.
750,000 Btu/h (220 kW)

Feedback

Your answer is incorrect.

3,600sec.hr.26sec.rev.×0.1m3rev.×35.31ft.3m3×(5psig+14.73psi14.73psia)×1,050Btuft.3=687,380Btuh3,600sec.hr.26sec.rev.×0.1m3rev.×35.31ft.3m3×(5psig+14.73psi14.73psia)×1,050Btuft.3=687,380Btuh

The correct answer is: 688,000 Btu/h (201 kW)

Question text

Calculate the input to a burner that is fired on a 50% butane-air mixture if it takes 48 seconds for the 2 ft.3ft.3 test dial to complete one revolution. The gas meter has an operating pressure of 5 Psig:

Select one:

a.
240,000 Btuh

b.
480,000 Btuh

c.
643,000 Btuh

d.
321,000 Btuh

Feedback

Your answer is incorrect.

$3{,}600_{sec.hr.} 48_{sec.rev.} \times 2_{ft.^3rev.} \times (5_{psig} + 14.73_{psi} 14.73_{psia}) \times 1{,}600_{Btuft.^3} = 321{,}360 Btuh$3,600sec.hr.48sec.rev.×2ft.3rev.×(5psig+14.73psi14.73psia)×1,600Btuft.3=321,360Btuh

The correct answer is: 321,000 Btuh

Question text

Determine the input to a appliance under the following conditions (choose the closest answer):

- Service pressure = 60 Psig
- Local atmospheric pressure = 13.38 Psi
- Seconds/revolution = 18
- Meter pressure = 5 psig
- manifold pressure =7 inches water column
- Test dial = 0.05 $m^3/rev.$m3/rev.
- Building line pressure = 2 Psig
- Truck in the driveway = Green
- Weather = Partly Cloudy
- Gas = 1,050 $Btu/Ft.^3$Btu/Ft.3

Select one:

a.
496,000 Btuh

b.
463,000 Btuh

c.
420,000 Btuh

d.
131,000 Btuh

Feedback

Your answer is incorrect.

$3{,}600_{sec.hr.} 18_{sec.rev.} \times 0.05 m3_{rev.} \times (5 Psig + 13.38 Psi 14.73 Psia) \times 35.31 ft.3 m3 \times 1{,}050 Btuft.3 = 462{,}702 Btuh$3,600sec.hr.18sec.rev.×0.05m3rev.×(5Psig+13.38Psi14.73Psia)×35.31ft.3m3×1,050Btuft.3=462,702Btuh

The correct answer is: 463,000 Btuh

Question text

Calculate the input (to the closest answer) using the following information:

- Service Pressure = 60 Psig
- Meter pressure = 5 Psig
- Manifold pressure = 3.5 inches water column
- Test dial size = (5 cubic ft)
- Seconds/revolution = 20
- Calorific value = 1,000 Btu/Ft.3Btu/Ft.3

Select one:

a.
1,205,000 Btuh

b.
4,566,000 Btuh

c.
6,300,000 Btuh

d.
900,000 Btuh

Feedback

Your answer is incorrect.

$3{,}600_{sec.hr.} 20_{sec.rev.} \times 5 ft.3 rev. \times (5 Psig + 14.73 Psi 14.73 Psia) \times 1{,}000 Btuft.3 = 1{,}205{,}100 Btuh$

The correct answer is: 1,205,000 Btuh

Question text

An appliance is clocked on a 2 Psi meter set without correcting for the pressure. The result will be:

Select one:

a.
the appliance clocked input will be correct

b.
there is no need to clock any appliance if 2 Psi gas is used

c.
the appliance will appear to be overfired

d.
the appliance will appear to be underfired

Feedback

Your answer is incorrect.

The correct answer is: the appliance will appear to be underfired

Which of the following is not a type of burner orifice ?

Select one:

a.
Adjustable

b.
Cap / Universal

c.
Fixed

d.
Modulating

Feedback

Your answer is correct.

The correct answer is: Modulating

Question text

Which orifice would be used in a DUAL FUEL appliance (natural gas / propane) ?

Select one:

a.
Fixed

b.
Modulating

c.
Cap / Universal

d.

Adjustable

Feedback

Your answer is incorrect.

The correct answer is: Cap / Universal

Question text

Referencing the multiplier table A.15 (B149.1 Gas Code)

What is the multiplier for air ?

Select one:

a.
Not listed

b.
1

c.
0.6

d.
0.775

Feedback

Your answer is correct.

The correct answer is: 0.775

Question text

What size orifices would be required to fire a 65000 BTUH (natural gas) furnace with 3 burners at 3 inches water column manifold pressure ?

Select one:

a.
44

b.
43

c.
3/32 inch

d.
42

Feedback

Your answer is correct.

65000 / 1000 ÷ 3 burner = 21.668 CFH / Per burner

21.667 CFH @ 3 inch WC = 43 (20.76 CFH)

The correct answer is: 43

Question text

Calculate the orifice flow rate and size for each of the following appliances fired on natural gas:

Question text

An appliance is found to have a #51 orifice installed in each of its 4 burners. If fired on propane at 11 in. w.c. pressure, what would the input be? Answer 127500 Btuh

Feedback

Propane #51 @ 11" w.c. = 13.37$_{CFHorifice}$13.37CFHorifice 13.37$_{CFHorifice}$×4 Burners×2,500$_{Btuft.3}$=133,700Btuh13.37CFHorifice×4 Burners×2,500Btuft.3=133,700Btuh

The correct answer is: 133700

Question text

To change the fuel on an appliance from natural gas to propane which of the following would be done ?

Select one:

a.
Install smaller orifices , increase manifold pressure

b.
Install larger orifice , increase manifold pressure

c.
Install smaller orifice , decrease manifold pressure

d.
Install larger orifice , decrease manifold pressure

Feedback

Your answer is incorrect.

The correct answer is: Install smaller orifices , increase manifold pressure

Question text

An appliance with 5 burners is using propane at 11 inches w.c. manifold pressure. The orifice size used is found to be a #50. What would the input to this appliance be? Answer 72950 Btuh

Feedback

Propane #50 @ 11" w.c. = 14.59$_{CFHorifice}$14.59CFHorifice
input = 14.59$_{CFHorifice}$×5 Burners×2,500$_{Btuft.3}$14.59CFHorifice×5 Burners×2,500Btuft.3

The correct answer is: 182375

Question text

In the diagram below, the device shown is:

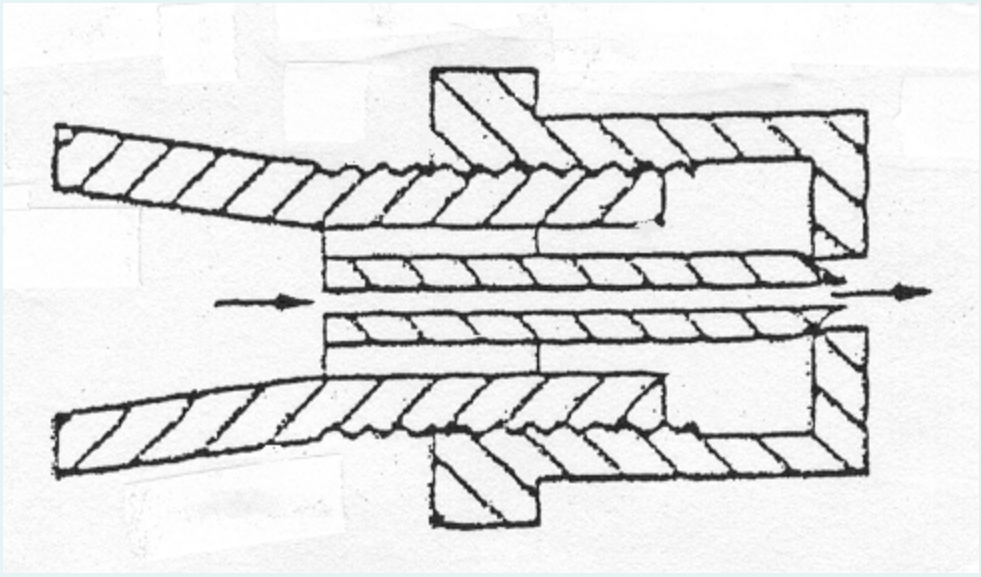

Select one:

a.
a universal main burner orifice adjusted for natural gas operation

b.
an insert type pilot orifice

c.
a universal main burner orifice adjusted for propane operation

d.
a spud type pilot orifice

Feedback

Your answer is correct.

The correct answer is: a universal main burner orifice adjusted for propane operation

Question text

If the cross-sectional area of an orifice is doubled, the flow rate will be increased by:

Select one:

a.
half the original flow rate

b.
twice the original flow rate

c.
four times the original flow rate

d.
eight times the original flow rate

Feedback

Your answer is correct.

The correct answer is: twice the original flow rate

Question text

A natural gas boiler is equipped with 20 burners and fires at a manifold pressure of 3.5 in. w.c. It is determined with the use of orifice drills that each orifice is a #50. The calorific value of gas burned s 1,070 Btu/Ft.$_3$Btu/Ft.3. The firing rate of the boiler will be closest to:

Select one:

a.
257,000 Btuh

b.
15,000 Btuh

c.
278,000 Btuh

d.
298,000 Btuh

Feedback

Your answer is incorrect.

Natural Gas #50 @ 3.5" w.c. = 13.87$_{CFHorifice}$13.87CFHorifice
Input = 13.87$_{CFHorifice}$×20 Burners×1,070$_{Btuft.3}$13.87CFHorifice×20 Burners×1,070Btuft.3

The correct answer is: 298,000 Btuh

Question text

A Natural Gas appliance has a rated input of 140 MBH. If the appliance has four burners and operates at a manifold pressure of 7 inches water column, the correct orifice to fire the appliance to its rated input would be:

Select one:

a.
#41

b.
#42

c.
#43

d.
#13

Feedback

Your answer is correct.

$140{,}000\text{Btuh}1{,}000_{\text{Btuft.3}}$÷4 Burners=35CFHorifice140,000Btuh1,000Btuft.3÷4 Burners=35CFHorifice 35CFHorifice@7"w.c.35CFHorifice@7"w.c. = # 43

The correct answer is: #43

Question text

An appliance equipped with three burners and using natural gas at 3.5 inches water column pressure, has a rated input of 300 MBH. Select the orifices required:

Select one:

a.
#13

b.
3/16"

c.
#14

d.
#12

Feedback

Your answer is correct.

300,000Btuh1,000Btuft.3÷3 burners=100Btuorifice300,000Btuh1,000Btuft.3÷3 burners=100Btuorifice 100CFHorifice@3.5"w.c.=316"100CFHorifice@3.5"w.c.=316"

The correct answer is: 3/16"

Question text

A 375 MBH appliance which is operated on propane, has four burners fired at 11 inches water column manifold pressure. Select the orifices required:

Select one:

a.
3/16"

b.
#34

c.
#54

d.
1/8"

Feedback

Your answer is incorrect.

375,000Btuh2,500Btuft.3÷4 Burners=37.5CFHorifice375,000Btuh2,500Btuft.3÷4 Burners=37.5CFHorifice 37.5CFHorifice@11"w.c.=37.5CFHorifice@11"w.c.= #34

The correct answer is: #34

Question text

Which orifice would have the highest flow rate?

Select one:

a.
#24 @ 4 inches water column

b.
#25 @ 4 inches water column

c.
#25 @ 3 inches water column

d.
#24 @ 3 inches water column

Feedback

Your answer is incorrect.

The correct answer is: #24 @ 4 inches water column

Question text

A propane-air mixture has a specific gravity of 1.3 and a calorific value of 1,250 Btu/Ft.3Btu/Ft.3. If an appliance has a rated input of 200 MBH and has five burners operating on 4 inches water column manifold pressure, what is the required orifice size?

Select one:

a.
#45

b.
#38

c.
#31

d.
#33

Feedback

Your answer is correct.

200,000Btuh1,250Btuft.3÷5 Burners=32CFHorifice200,000Btuh1,250Btuft.3÷5 Burners=32CFHorifice
32CFHorifice÷0.68(multiplierforSg.1.3)=47.06CFHorifice32CFHorifice÷0.68(multiplierforSg.1.3)
=47.06CFHorifice
47.06CFHorifice@4"w.c.=47.06CFHorifice@4"w.c.= #31

The correct answer is: #31

Question text

An appliance has a high altitude rating of 245,500 Btuh and a sea level rating of 337,750 Btuh. Match the calculated de-rated inputs to the given elevations if they were installed at these elevations.

9,600 Ft. Answer 1
337,750 Btuh

6,600 Ft. Answer 2
245,500 Btuh

2,100 Ft. Answer 3
216,040 Btuh

375 Ft. Answer 4
186,580 Btuh

Feedback

Your answer is incorrect.

The correct answer is: 9,600 Ft. → 186,580 Btuh, 6,600 Ft. → 216,040 Btuh, 2,100 Ft. → 245,500 Btuh, 375 Ft. → 337,750 Btuh

Question text

A boiler certified for high altitude is installed at an elevation of 5,500 feet. The rating plate indicates a sea level rating of 150,000 Btuh and a high altitude rating of 130,000 Btuh. The boiler should be adjusted to an input of:

Select one:

a.
150,000 Btuh

b.
130,000 Btuh

c.
124,800 Btuh

d.
109,200 Btuh

Feedback

Your answer is incorrect.

130,000 Btuh - 4% = 124,800 Btuh

The correct answer is: 124,800 Btuh

Question text

To double the gas flow through the orifice of an atmospheric burner, the manifold pressure shall be increased by:

Select one:

a.
50%

b.
four times

c.
double

d.
three times

Feedback

Your answer is incorrect.

$Q=\Delta P---\sqrt{Q=\Delta P}$
$2_2=\Delta P22=\Delta P$
$4=\Delta P4=\Delta P$

The correct answer is: four times

Question text

Find the orifice sizes required for the following appliances:

385,000 Btuh; Calorific Value = 1,050 Btu/Ft.$_3$Btu/Ft.3; 5 Burners; Manifold Pressure = 3.5 inches water column; Specific Gravity = 0.6

Select one:

a.
#21

b.
#20

c.
#22

d.
#19

Feedback

Your answer is correct.

$_{385,000Btuh1,050Btuft.3}\div 5$ Burners=73.333$_{CFHorifice}$385,000Btuh1,050Btuft.3÷5 Burners=73.333CFHorifice
73.333$_{CFHorifice}$@3.5"w.c.=73.333CFHorifice@3.5"w.c.= #21

The correct answer is: #21

Question text

225,000 Btuh; Calorific Value = 1,350 Btu/Ft.$_3$Btu/Ft.3; 4 Burners; Manifold Pressure = 4 inches water column; Specific Gravity = 1.2

Select one:

a.
#30

b.
#31

c.
#28

d.
#29

Feedback

Your answer is correct.

225,000Btuh1,350Btuft.3÷4 Burners=41.667CFHorifice225,000Btuh1,350Btuft.3÷4 Burners=41.667CFHorifice
41.667CFHorifice÷0.707(multiplierforSg.)=58.934CFHorifice@"w.c.=41.667CFHorifice÷0.707(multiplierforSg.)=58.934CFHorifice@"w.c.= #29

The correct answer is: #29

Question text

1,300 MBH; Calorific Value = 985 Btu/Ft.3Btu/Ft.3; 10 Burners; Manifold Pressure = 3 inches water column; Specific Gravity = 0.9

Select one:

a.
C

b.
B

c.
D

d.
E

Feedback

Your answer is correct.

1,300,000Btuh985Btuft.3÷10 Burners=131.98CFHorifice1,300,000Btuh985Btuft.3÷10 Burners=131.98CFHorifice

131.98CFHorifice÷0.817(MultiplierforSg.)=161.542CFHorifice@3"w.c.="D"131.98CFHorifice÷0.817(MultiplierforSg.)=161.542CFHorifice@3"w.c.="D"

The correct answer is: D

Question text

475,000 Btuh; Calorific Value = 1,000 Btu/Ft.3Btu/Ft.3; 8 Burners; Manifold Pressure = 3.5 inches water column; Specific Gravity = 0.6

Select one:

a.
#29

b.
#28

c.
#27

d.
#26

Feedback

Your answer is correct.

475,000Btuh1,000Btuft.3÷8 Burners=59.375CFHorifice@3.5"w.c.=475,000Btuh1,000Btuft.3÷8 Burners=59.375CFHorifice@3.5"w.c.= #27

The correct answer is: #27

Question text

160,000 Btuh; Calorific Value = 1,250 Btu/Ft.3Btu/Ft.3; 4 Burners; Manifold Pressure = 5 inches water column; Specific Gravity = 0.8

Select one:

a.
#38

b.
#37

c.
#35

d.

#36

Feedback

Your answer is correct.

160,000Btuh1,250Btuft.3÷4 Burners=32CFHorifice160,000Btuh1,250Btuft.3÷4 Burners=32CFHorifice 32CFHorifice÷0.867(MultiplierforSg.)=36.909CFHorifice@5"w.c.=32CFHorifice÷0.867(MultiplierforSg.)=36.909CFHorifice@5"w.c.= #37

The correct answer is: #37

Question text

650,000 Btuh; Calorific Value = 1,070 Btu/Ft.3Btu/Ft.3; 6 Burners; Manifold Pressure = 3 inches water column; Specific Gravity = 0.8

Select one:

a.
#5

b.
#2

c.
#4

d.
#3

Feedback

Your answer is correct.

650,000Btuh1,070Btuft.3÷6 Burners=101.246CFHorifice650,000Btuh1,070Btuft.3÷6 Burners=101.246CFHorifice 101.246CFHorifice÷0.867(MultiplierforSg.)=116.778CFHorifice@3"w.c.=101.246CFHorifice÷0.867(MultiplierforSg.)=116.778CFHorifice@3"w.c.=

The correct answer is: #4

Question text

How much air could pass through a #40 orifice at 3.5 inches water column? Answer 271900 CFHorificeCFHorifice

Feedback

#40 @ 3.5" w.c.
= 27.19CFHorifice(NaturalGas)×0.775(MultiplierforSg.)=21.07CFHorifice27.19CFHorifice(NaturalGas)×0.775(MultiplierforSg.)=21.07CFHorifice

The correct answer is: 21.07

Question text

An appliance has a sea level rating of 250 MBH and a high altitude rating of 220 MBH. The rating plate specifies a manifold pressure of 3.5 inches water column. When you look in the combustion chamber, you notice 5 upshot multi-port burners. The fuel gas supplied to this appliance has a calorific value of 0.314 kW/ft.3kW/ft.3 and a specific gravity of 0.65. If you are installing this appliance at an elevation of 6,000 feet above sea level, what size of orifices would be required to fire the appliance to its rated input?

Select one:

a.
#32

b.
#31

c.
#34

d.
#33

Feedback

Your answer is incorrect.

220,000Btuh−8220,000Btuh−8 % =202,400Btuh=202,400Btuh
0.314kWft.3÷0.000293kWBtu=1,072Btuft.30.314kWft.3÷0.000293kWBtu=1,072Btuft.3
202,400Btuh1,072Btuft.3÷5 Burners=37.761CFHorifice202,400Btuh1,072Btuft.3÷5 Burners=37.761CFHorifice
37.761CFHorifice÷0.962(MultiplierforSg.)=39.253CFHorifice37.761CFHorifice÷0.962(MultiplierforSg.)=39.253CFHorifice
39.253CFHorifice@3.5"w.c.=39.253CFHorifice@3.5"w.c.= #32

The correct answer is: #32

The drawing below is of a propane:

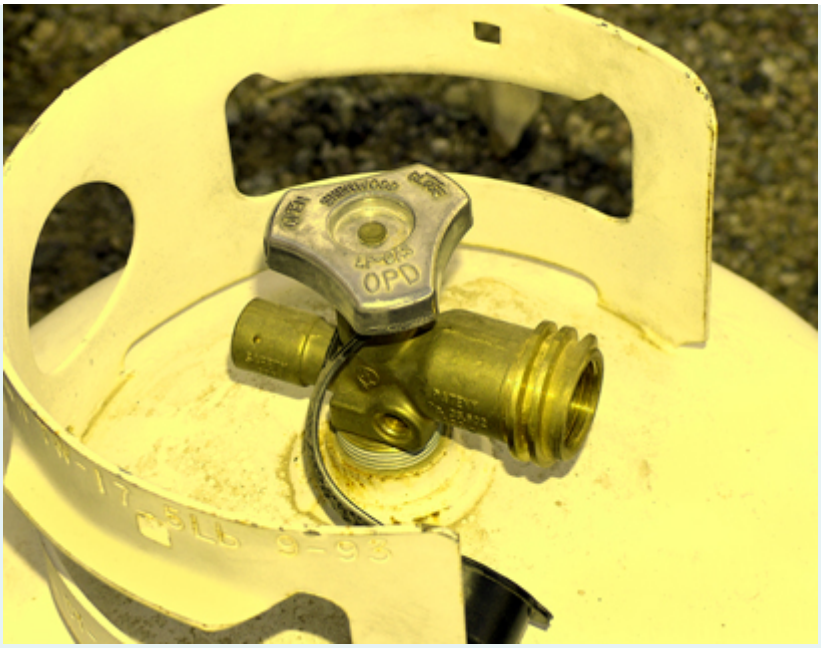

Select one:

a.

evacuation valve for large tanks

b.

valve with overfill protection device

c.

cylinder liquid withdrawal valve

d.

liquid withdrawal valve for a forklift

Feedback

Your answer is correct.

The correct answer is: valve with overfill protection device

Question text

The smallest size cylinder, known as a disposable type, is:

Select one:

a.

5 pounds

b.

10 pounds

c.

20 pounds

d.

1 pound

Feedback

Your answer is correct.

The correct answer is: 1 pound

Question text

What is the sum of all whole numbers from 1 to infinity? ∑n=1↓,∞↑∑n=1↓,∞↑

Select one:

a.

Cannot be determined

b.

-1/12

c.

∞

d.

0

Feedback

Your answer is incorrect.

find the proof here if you're curious :

https://www.youtube.com/watch?v=w-I6XTVZXww

The correct answer is: -1/12

Question text

The largest size cylinder is:

Select one:

a.

1,000 pounds

b.

500 pounds

c.

100 pounds

d.

250 pounds

Feedback

Your answer is incorrect.

The correct answer is: 500 pounds

Question text

Liquid propane capacity is listed on tanks in:

Select one:

a.

pounds of propane

b.

pounds for small tanks and gallons for big tanks

c.

pounds or gallons of propane on all tanks

d.

gallons of water capacity

Feedback

Your answer is correct.

The correct answer is: gallons of water capacity

Question Question text

The type of thread connection found on the outlet of a vapour service valve is:

Select one:

a.

POL

b.

NPT

c.

BSPT

d.

NPS

Feedback

Your answer is correct.

The correct answer is: POL

Question text

The relief valve start-to-discharge pressure for a cylinder is:

Select one:

a.

312 Psig

b.

420 Psig

c.

250 Psig

d.

375 Psig

Feedback

Your answer is correct.

The correct answer is: 375 Psig

Question text

A data plate with construction information is found attached to:

Select one:

a.

cylinders and tanks

b.

cylinders

c.

tanks

d.

cylinders over 420 pounds capacity

Feedback
Your answer is correct.

The correct answer is: tanks

Question text
When calculating the *effective load* that an appliance will place on a propane container, which formula should be used?

Select one:

a.

Effective load = weight of propane X load factor

b.

Effective load = input X load factor

c.

Effective load = gallons of liquid propane X 91,500

d.

Effective load = Btu/H of input

Feedback
Your answer is correct.

The correct answer is: Effective load = input X load factor

Question text
Calculate the effective load on a propane container supplying a 100,000 Btu/h central heating furnace: Answer 50000 Btuh

Feedback
100,000 Btuh x 0.5 = 50,000 Btuh

The correct answer is: 50000

Question text
Calculate the effective load on a propane storage container for a 50,000 Btu/h construction heater: Answer 50000 Btu

Feedback
50,000 Btuh x 1 = 50,000 Btu

The correct answer is: 50000

Question text
A propane-fired furnace at 100,000 Btu/h and hot water tank at 40,000 Btu/h are connected to an above ground storage tank. If the lowest winter temperature in the area is 10ºF,

calculate the size of the propane storage tank required at 75% humidity: Answer 1000 Gal. Tank

Feedback
Furnace 100,000 Btuh x 0.5 = 50,000 Btuh

Hot Water Tank 40,0000 Btuh x 0.16 = 6,400 Btuh

Total = 56,400 Btuh

56,400 Btuh @ 10ºF and 80% Humidity = 1,000 Gal. Tank

The correct answer is: 1000

he type of container usually considered portable would be a Cylinder .

Feedback
Your answer is correct.

The correct answer is:

The type of container usually considered portable would be a [Cylinder].

Question text

A 20lb propane cylinder would hold Answer 17 pounds of liquid propane.

Feedback
The correct answer is: 20

Question text

The density of liquid propane is Answer 493 lbs / cubic foot.

Feedback
The correct answer is: 31.8

Question text

The Tank weight of a cylinder is the weight of an empty cylinder with valve.

Feedback
Your answer is incorrect.

The correct answer is:

The [Tare] weight of a cylinder is the weight of an empty cylinder with valve.

Question text

The Gas in a propane cylinder will vary widely with ambient temperature.

Feedback
Your answer is incorrect.

The correct answer is: The [Pressure] in a propane cylinder will vary widely with ambient temperature.

Question text

The pressure relief valve setting on a propane cylinder is typically Answer 375 psig.

Feedback
The correct answer is: 375

Question text

The maximum permitted fill level of a propane cylinder Answer 80 percent.

Feedback
The correct answer is: 80

Question text

At atmospheric pressure , propane is found in what physical state ? Vapour

Feedback
Your answer is incorrect.

The correct answer is:

At atmospheric pressure , propane is found in what physical state ? [Gas]

Question text
Vaporization of gas creates a natural _____ effect.

Select one:

a.

Refrigeration

b.

Vapourization

c.

Heating

d.

Condensing

Feedback

Your answer is incorrect.

The correct answer is: Refrigeration

Question text

What name is given to the connection that is utilized for vapor service applications ?

Select one:

a.

P.O.L

b.

C.S.A

c.

M.V.P

d.

L.O.P

Feedback

Your answer is correct.

The correct answer is: P.O.L

Question text

The Wetted area of a container is the specific area that comes into contact with the LP gas liquid.

Feedback

Your answer is correct.

The correct answer is:

The [Wetted] area of a container is the specific area that comes into contact with the LP gas liquid.

Question text

The greater the wetter area the greater the Surface vaporization rate.

Feedback

Your answer is incorrect.

The correct answer is:

The greater the wetter area the greater the [Liquid] vaporization rate.

Question text

The largest portable LP gas container would be a Answer 260 pound cylinder.

Feedback

The correct answer is: 500

Given a closed container in which there is 16 cubic feet of air at 35 PSIG, what will the volume of air be if water is forced into the container until the pressure becomes 105 PSIG?

Answer cu.Ft

Feedback

V1P1 = V2P2

V2 = (V1P1)/P2

V2 = (16 x 49.73) / 119.73

V2 = 6.646 cu.Ft

Don't forget all pressures must be entered as PSI**A**

The correct answer is: 6.646

Marked out of 1.00

Question text

What will the volume be if 920 cubic inches of gas is cooled from 16C to -7C?

Answer cu.in

Feedback

V1/T1 = V2/T2

V2 = (V1T2) / T1

V2 = (920 x 266) / 289

V2 = 846.782 cu.in

The correct answer is: 846.782

Question text

If 310 cubic feet of oxygen is under a pressure of 50 PSIG, to what gauge pressure must the gas be compressed so that it fits into a 15 cubic foot cylinder?

Answer PSIG

Feedback

V1P1 = V2P2

P2 = (V1P1) / V2

P2 = (310 x 64.73) / 15

P2 = 1337.753 psia

PSIG = PSIA - Atmospheric Pressure

PSIG = 1337.753 - 14.73

PSIG = 1323.023

The correct answer is: 1323.023

Question text

An 8 cubic foot air chamber at 40 PSIG is released into the atmosphere. What volume will the released air have?

Answer cu.Ft

Feedback

V1P1 = V2P2

V2 = (V1P1)/P2

V2 = (8 x 54.73) / 14.73

V2 = 29.724 cu.Ft

Don't forget all pressures must be entered as PSI**A**

The correct answer is: 29.724

Question text

A gas measures 920 cubic inches at 60F. What is its volume at 93F?

Answer cu.in

Feedback

V1/T1 = V2/T2

V2 = (V1T2) / T1

V2 = (920 x 553) / 520

V2 = 978.385 cu.in

The correct answer is: 978.385

Question text

A compression tank in a hot water space heating system contains 4 cu.ft. at 5 PSIG. What will the pressure be when the air volume is 2 cu.ft.?

Answer PSIG

Feedback

V1P1 = V2P2

P2 = (V1P1) / V2

P2 = (4 x 19.73) / 2

P2 = 39.46 psia

PSIG = PSIA - Atmospheric Pressure

PSIG = 39.46 - 14.73

PSIG = 24.73

The correct answer is: 24.73

Question text

Select Boyles Law:

Select one:

a.

V1P1 = V2P2

b.

P1/T1 = P2/T2

c.

V1/P1 = V2/T2

d.

V1/T1 = V2/T2

Feedback

Your answer is incorrect.

The correct answer is: V1P1 = V2P2

Question text

Select Charles' Law I and II:

Select one or more:

a.

V1/P1 = V2/P2

b.

V1/T1 = V2/T2

c.

T1/P1 = T2/P2

d.

P1/V1 = P2/V2

e.

P1/T1 = P2/T2

Feedback

Your answer is incorrect.

CL #1 - P1/T1 = P2/T2

CL #2 - V1/T1 = V2/T2

The correct answers are: P1/T1 = P2/T2, V1/T1 = V2/T2

Question text

All gases expand the same amount when heated one degree.

Select one:

True

False

Feedback

The correct answer is 'True'.

Question text

The smallest size cylinder, known as a disposable type, is:

Select one:

a.

20 pounds

b.

10 pounds

c.

1 pound

d.

5 pounds

Feedback

Your answer is incorrect.

The correct answer is: 1 pound

Question text

The largest size cylinder is:

Select one:

a.

100 pounds

b.

1,000 pounds

c.

500 pounds

d.

250 pounds

Feedback
Your answer is incorrect.

The correct answer is: 500 pounds

Question text
Liquid propane capacity is listed on tanks in:

Select one:

a.

pounds for small tanks and gallons for big tanks

b.

pounds or gallons of propane on all tanks

c.

pounds of propane

d.

gallons of water capacity

Feedback
Your answer is incorrect.

The correct answer is: gallons of water capacity

Question text
The type of thread connection found on the outlet of a vapour service valve is:

Select one:

a.

POL

b.

NPS

c.

BSPT

d.

NPT

Feedback
Your answer is incorrect.

The correct answer is: POL

Question text
The relief valve start-to-discharge pressure for a cylinder is:

Select one:

a.

250 psig

b.

420 psig

c.

375 psig

d.

312 psig

Feedback
Your answer is incorrect.

The correct answer is: 375 psig

Question text
A data plate with construction information is found attached to:

Select one:

a.

cylinders

b.

cylinders over 420 pounds capacity

c.

tanks

d.

cylinders and tanks

Feedback

Your answer is incorrect.

The correct answer is: tanks

Question text

When calculating the effective load that an appliance will place on a propane container, which formula should be used?

Select one:

a.

Effective load = weight of propane x load factor

b.

Effective load = Btu/h of input

c.

Effective load – gallons of liquid propane x 91,500

d.

Effective load = input x load factor

Feedback

Your answer is incorrect.

The correct answer is: Effective load = input x load factor

Question text

Calculate the effective load on a propane container of a 100,000 Btu/h domestic furnace:

Answer Btuh

Feedback

Effective Load = 100,000 Btuh x 0.5 = 50,000 Btuh

The correct answer is: 50000

Question text

Calculate the effective load on a propane storage container of a 50,000 Btu/h construction heater:

Answer Btuh

Feedback

Effective Load = 50,000 Btuh x 1 = 50,000 Btuh

The correct answer is: 50000

Referring to the tables in the text. A propane-fired furnace at 100,000 Btu/h and hot water tank at 40,000 Btu/h are connected to an above ground storage tank. If the lowest winter temperatures in the area are 10F, calculate the size of the propane storage tank required (at 70% humidity):

Answer gallon tank

Feedback

100,000 Btuh x 0.5 = 50,000 Btuh

40,000 Btuh x 0.16 = 6,400 Btuh

Total = 56,400 Btuh

Table A-1 = 500 gallon tank

The correct answer is: 500

Question text

A storage type hot water tank rated at 35,000 Btu/h is designed to fire on low pressure natural gas (C.V. 1,050 Btu/cu.ft.). You clock the meter and find that it takes 50 seconds for one complete revolution of the 1/2 cubic foot test dial. This indicates that the appliance is:

Select one:

a.

over-firing and the orifice will have to be decreased in size

b.

under-fired and the orifice will have to be increased in size

c.

under-fired and the orifice will have to be decreased in size

d.

firing correctly and no adjustments are necessary

Feedback

Your answer is incorrect.

3600*sec/hr* ÷ 0.5*cu.Ft/rev* x 1050*Btu/cu.Ft* = **37800 Btuh**

The correct answer is: over-firing and the orifice will have to be decreased in size

Which of the following is the pressure correction factor formula?

Select one:

a.

PCF=MeterPressure+LocalAtmosphericPressureStandardPressurePCF=MeterPressure+LocalAtmosphericPressureStandardPressure

b.

PCF=MeterPressure×AbsolutePressureSeaLevelPressurePCF=MeterPressure×AbsolutePressureSeaLevelPressure

c.

PCF=MeterPressure×StandardPressureLocalAtmosphericPressurePCF=MeterPressure×StandardPressureLocalAtmosphericPressure

d.

PCF=MeterPressure+StandardPressureLocalAtmosphericPressurePCF=MeterPressure+StandardPressureLocalAtmosphericPressure

Feedback

Your answer is correct.

The correct answer

is: PCF=MeterPressure+LocalAtmosphericPressureStandardPressurePCF=MeterPressure+LocalAtmosphericPressureStandardPressure

Question text

Which of the following is the temperature correction factor formula?

Select one:

a.

TCF=GasTemp+460(273)StandardTemp+460(273)TCF=GasTemp+460(273)StandardTemp+460(273)

b.

TCF=StandardTemp+460(273)StandardPressure+14.73TCF=StandardTemp+460(273)StandardPressure+14.73

c.

TCF=StandardPressure+14.73StandardTemp+460(273)TCF=StandardPressure+14.73StandardTemp+460(273)

d.

TCF=StandardTemp+460(273)GasTemp+460(273)TCF=StandardTemp+460(273)GasTemp+460(273)

Feedback

Your answer is correct.

The correct answer is: TCF=StandardTemp+460(273)GasTemp+460(273)TCF=StandardTemp+460(273)GasTemp+460(273)

Question text

Simply stated, Boyle's Law says that if the pressure exerted upon a gas increases, its volume will Answer decreases .

Feedback

The correct answer is: decrease

Question text

Simply stated, Charles' Law says that if the temperature exerted upon a gas increases, its volume will Answer increase .

Feedback

The correct answer is: increase

Question text

Which type of meter has the correction factor stamped on a brass tag attached to the meter? Answer compensat

Feedback

The correct answer is: Pressure Factor Measurement

Question text

Clock the input using the following information:

- Test Dial = 5 Ft.3Ft.3
- Time for One Revolution = 15 seconds
- Gas = Natural
- Local Atmospheric Pressure = 14.28 Psi
- Meter Pressure = 10 Psi

Input = Answer 1597200 Btuh

Feedback

input

$= \frac{3{,}600\text{sec.hr.}}{15\text{sec.rev.}} \times \frac{5\text{ft.}^3\text{rev.}}{} \times \frac{(10\text{Psig}+14.28\text{Psi}}{14.73\text{Psia}}) \times \frac{1{,}000\text{Btuft.}^3}{}$

The correct answer is: 1977600

Question 7

Question text

Determine the input to the appliance if:

- Seconds per revolution = 17
- Gas temperature = 22ºF
- Test dial = 5 Ft.3Ft.3
- Gas = Natural
- Local Atmospheric Pressure = 14.56 Psi
- Meter Pressure = 20 Psi
- Meter not temperature compensated

Input = Answer 2475720 Btuh

Feedback

Input

= 3,600sec.hr.17sec.rev.×5ft.3hr.×(20Psig+14.56Psi14.73Psia)×(60F+46022F+460)×1,000Btuft.33,600sec.hr.17sec.rev.×5ft.3hr.×(20Psig+14.56Psi14.73Psia)×(60F+46022F+460)×1,000Btuft.3

The correct answer is: 2680236

Question text

Given a closed container in which there is 16 cubic feet of air at 35 Psig, what will the volume of air be if water is forced into the container until the pressure becomes 105 Psig?

V2V2 = Answer ft.3ft.3

Feedback

V2=V1P1P2V2=V1P1P2

V2=16ft.3×(35Psig+14.73psi)(105psig+14.73psi)V2=16ft.3×(35Psig+14.73psi)(105psig+14.73psi)

The correct answer is: 6.65

Question text

What will the volume be if the 920 cubic inches of gas is cooled from 16ºC to -7ºC ? (to 2 decimals)

V2V2 = Answer 848.49 in.3in.3

Feedback

V2=V1T2T1V2=V1T2T1

V2=920in.3×(−7ºC+273)(16ºC+273)V2=920in.3×(−7ºC+273)(16ºC+273)

The correct answer is: 846.78

Question text

If 310 cubic feet of oxygen is under a pressure of 50 Psig, to what gauge pressure must the gas be compressed so that it fits into a 15 cubic foot cylinder? (to 2 decimals)

P2P2 = Answer 4 psigpsig

Feedback

P2=V1P1V2P2=V1P1V2

P2=310ft.3×(50psig+14.73psi)15ft.3P2=310ft.3×(50psig+14.73psi)15ft.3

P2=1,337.75psia−14.73psiP2=1,337.75psia−14.73psi

The correct answer is: 1323.02

Question text

An 8 cubic foot air chamber at 40 Psig is released into the atmosphere. What volume will the released air have? (to 2 decimals)

V2V2 Answer 29.77 ft.3ft.3

Feedback

V2=V1P1P2V2=V1P1P2

V2=8ft.3×(40psig+14.73psi)14.73PsiaV2=8ft.3×(40psig+14.73psi)14.73Psia

The correct answer is: 29.72

Question text

A gas measures 920 cubic inches at 60ºF. What is its volume at 93ºF?

V2V2 = Answer 865.09 in.3in.3

Feedback

V2=V1T2T1V2=V1T2T1

V2=920in.3×(93F+460)(60F+460)V2=920in.3×(93F+460)(60F+460)

The correct answer is: 978.38

Question text

Which of the following is the combined gas law formula?

Select one:

a.

V1T1P1=V2T2P2V1T1P1=V2T2P2

b.

V1P1T1=V2P2T2V1P1T1=V2P2T2

c.

V1P1T1=V2P2T2V1P1T1=V2P2T2

d.

T1P1V1=T2P2V2T1P1V1=T2P2V2

Feedback

Your answer is incorrect.

The correct answer is: V1P1T1=V2P2T2V1P1T1=V2P2T2

Question text

All gases expand the same amount when heated one degree.

Select one:

True

False

Feedback

The correct answer is 'True'.

Question text

The test dials are timed on a gas meter that is recording a flow rate of gas at pressures more than 1/2 Psi (3.45 kPa). If no allowance is made for the compression of the gas because of the pressure, the volume of flow indicated by the test dials will:

Select one:

a.
indicate the exact Btu input to the combustion chamber

b.
indicate the unit is overfired

c.
be the volume of fuel gas expressed in SCFH entering the combustion chamber

d.
indicate the unit is underfired

Feedback

Your answer is incorrect.

The correct answer is: indicate the unit is underfired

Question text

The correction factor of 1.679 would be used for a system operating at:

Select one:

a.
5 psig (34 kPa)

b.
10 psig (70 kPa)

c.
20 psig (140 kPa)

d.
2 psig (14 kPa)

Feedback

Your answer is incorrect.

PCF=MeterPressure+LocalAtmosphericPressureStandardPressurePCF=MeterPressure+LocalAtmosphericPressureStandardPressure

MeterPressure=PCF×StandardPressure−LocalAtmosphericPressureMeterPressure=PCF×StandardPressure−LocalAtmosphericPressure

MeterPressure=1.679×14.73psia−14.73psiaMeterPressure=1.679×14.73psia−14.73psia

MeterPressure=10psigMeterPressure=10psig

The correct answer is: 10 psig (70 kPa)

Question 17

Question text

calculate the input to an appliance by using the following information:

- Local atmospheric pressure = 14.60 Psi
- Gas service line pressure = 60 Psig
- Gas pressure through the meter = 10 Psig
- House line pressure = 2 Psig
- Appliance manifold pressure = 5 inches water column
- Test dial = 0.05 m3m3

Test dial completes one revolution in 1 minute. Calorific value of gas = 1,000 Btu/Ft.3)(10.35\(kW/m3Btu/Ft.3)(10.35\(kW/m3). The correct input is closest to which one of the following?

Select one:

a.

177,000 Btu/h (51.8 kW)

b.

536,000 Btu/h (156.9 kW)

c.

300,000 Btu/h (87.9 kW)

d.

106,000 Btu/h (31 kW)

Feedback

Your answer is incorrect.

3,600sec.hr.60sec.rev.×0.05m3rev.×(10psig+14.6psi14.73psia)×35,310Btum3=176,903Btuh3,600sec.hr.60sec.rev.×0.05m3rev.×(10psig+14.6psi14.73psia)×35,310Btum3=176,903Btuh

The correct answer is: 177,000 Btu/h (51.8 kW)

Question text

Calculate the clocked input to the following boiler. The boiler has a rated input of 1,000,000 Btu/h (292.2 kW). it has four burners and operates at a manifold pressure of 7 inches water column (1.74 kPa). The fuel is natural gas with a calorific value of 1,050 Btu/Ft.3Btu/Ft.3 (10.84 kW/m3kW/m3). The building is at sea level (14.73 Psi) and is supplied with 5 Psig (34 kPa) at the meter. One revolution of the 0.1 m3m3 test dial takes 26 seconds. The clocked input of the boiler is closest to which one of the following?

Select one:

a.

520,000 Btu/h (152 kW)

b.

688,000 Btu/h (201 kW)

c.

490,000 Btu\h (143 kW)

d.

750,000 Btu/h (220 kW)

Feedback

Your answer is incorrect.

3,600sec.hr.26sec.rev.×0.1m3rev.×35.31ft.3m3×(5psig+14.73psi14.73psia)×1,050Btuft.3=687,380Btuh3,600sec.hr.26sec.rev.×0.1m3rev.×35.31ft.3m3×(5psig+14.73psi14.73psia)×1,050Btuft.3=687,380Btuh

The correct answer is: 688,000 Btu/h (201 kW)

Question text

Calculate the input to a burner that is fired on a 50% butane-air mixture if it takes 48 seconds for the 2 ft.3ft.3 test dial to complete one revolution. The gas meter has an operating pressure of 5 Psig:

Select one:

a.

240,000 Btuh

b.

480,000 Btuh

c.

643,000 Btuh

d.

321,000 Btuh

Feedback

Your answer is incorrect.

3,600sec.hr.48sec.rev.×2ft.3rev.×(5psig+14.73psi14.73psia)×1,600Btuft.3=321,360Btuh3,600sec.hr.48sec.rev.×2ft.3rev.×(5psig+14.73psi14.73psia)×1,600Btuft.3=321,360Btuh

The correct answer is: 321,000 Btuh

Question text

Determine the input to a appliance under the following conditions (choose the closest answer):

- Service pressure = 60 Psig
- Local atmospheric pressure = 13.38 Psi
- Seconds/revolution = 18
- Meter pressure = 5 psig
- manifold pressure =7 inches water column
- Test dial = 0.05 m3/rev.m3/rev.
- Building line pressure = 2 Psig
- Truck in the driveway = Green
- Weather = Partly Cloudy
- Gas = 1,050 Btu/Ft.3Btu/Ft.3

Select one:

a.

496,000 Btuh

b.

463,000 Btuh

c.

420,000 Btuh

d.

131,000 Btuh

Feedback

Your answer is incorrect.

3,600sec.hr.18sec.rev.×0.05m3rev.×(5Psig+13.38Psi14.73Psia)×35.31ft.3m3×1,050Btuft.3=462,702Btuh3,600sec.hr.18sec.rev.×0.05m3rev.×(5Psig+13.38Psi14.73Psia)×35.31ft.3m3×1,050Btuft.3=462,702Btuh

The correct answer is: 463,000 Btuh

Question text

Calculate the input (to the closest answer) using the following information:

- Service Pressure = 60 Psig
- Meter pressure = 5 Psig
- Manifold pressure = 3.5 inches water column
- Test dial size = (5 cubic ft)
- Seconds/revolution = 20
- Calorific value = 1,000 Btu/Ft.3Btu/Ft.3

Select one:

a.

1,205,000 Btuh

b.

4,566,000 Btuh

c.

6,300,000 Btuh

d.

900,000 Btuh

Feedback

Your answer is incorrect.

3,600sec.hr.20sec.rev.×5ft.3rev.×(5Psig+14.73Psi14.73Psia)×1,000Btuft.3=1,205,100Btuh3,600sec.hr.20sec.rev.×5ft.3rev.×(5Psig+14.73Psi14.73Psia)×1,000Btuft.3=1,205,100Btuh

The correct answer is: 1,205,000 Btuh

Question text

An appliance is clocked on a 2 Psi meter set without correcting for the pressure. The result will be:

Select one:

a.

the appliance clocked input will be correct

b.

there is no need to clock any appliance if 2 Psi gas is used

c.

the appliance will appear to be overfired

d.

the appliance will appear to be underfired

Feedback

Your answer is incorrect.

The correct answer is: the appliance will appear to be underfired

How much Methane does Natural gas contain as a percentage (%) ?

Select one:

a.

80 to 95 %

b.

50 to 60%

c.

60 to 70 %

d.

100%

Feedback

Your answer is correct.

The correct answer is: 80 to 95 %

Question text

Is natural gas in its pure state a toxic gas? (type yes or no) Answer no

Feedback

The correct answer is: No

Question text

For the following questions you can type in the chemical formulas as follows (eg water = H2o) do not include spaces in your answers.

List the chemical formula for Natural Gas. Answer ch4

Feedback

The correct answer is: CH4

Question text

List the chemical formula for Propane. Answer c3h8

Feedback

The correct answer is: C3H8

Question text

List the chemical formula for Butane. Answer c4h10

Feedback

The correct answer is: C4H10

Question text

List the chemical formula for Carbon monoxide. Answer co2

Feedback

The correct answer is: CO

Question text

List the chemical formula for Carbon dioxide. Answer co2

Feedback

The correct answer is: CO2

Question text

List the chemical formula for Methane. Answer mo

Feedback

The correct answer is: CH4

Question text

List the chemical formula for Oxygen. Answer o2

Feedback

The correct answer is: O2

Question text

The ratio of the weight of a given volume of gas to the weight of an equal volume of air measured at standard temperature and pressure (60ºF @ 14.73 Psi or 15ºC @ 101.325 kPa). This is a description of...

Select one:

a.

Relative Heat

b.

Weight of a substance compared to the density of Hg

c.

Relative Volume

d.

Relative Density

Feedback

Your answer is incorrect.

The correct answer is: Relative Density

Question text

The total heat energy produced when a given volume of fuel is subjected to combustion.

Select one:

a.

Specific Heat

b.

Calorific Capacity

c.

Heating Value

d.

Combustion Capacity

Feedback

Your answer is incorrect.

The correct answer is: Heating Value

Question text

When one cubic foot of natural gas is burned it will produce Answer 1000 British Thermal Units.

Feedback

The correct answer is: 1000

Question text

Having any lesser amount of fuel than the lower flammable limit, a mixture would be Answer less and would not burn.

Feedback

The correct answer is: lean

Question text

Which of the following is used to odourize natural gas?

Select one:

a.

Sulphur

b.

Citric Acid

c.

Onion Oil

d.

Mercaptan

Feedback

Your answer is incorrect.

The correct answer is: Mercaptan

Question text

Natural gas must be readily detectable when _____ of the fuel gas per volume is present.

Select one:

a.

less than 10%

b.

more than 10%

c.

less than 1%

d.

any amount

Feedback

Your answer is incorrect.

The correct answer is: less than 1%

Question text

At standard atmospheric pressure, 14.73 Psi (101.325 kPa), the boiling point of propane is Answer 2500 . Answer in Fahrenheit as ###F (including the letter "F") .

Feedback

-44 F

or

-42 C

The correct answer is: -44F

Question text

Fuel gases are usually transported and stored in liquid state rather than as a gas due to the following:

(C3H8) 270 times more fuel can be stored in the same space.

(C4H10) 235 times more fuel can be stored in the same space.

Select one:

True

False

Feedback

The correct answer is 'True'.

Question text

The limits of flammability of propane gas in air are approximately:

Select one:

a.

2.5% to 9.5%

b.

4.6% to 14%

c.

5% to 15.3%

d.

10% to 45%

Feedback

Your answer is correct.

The correct answer is: 2.5% to 9.5%

Question text

Identify the limits of flammability for natural gas in air:

Select one:

a.

6% to 12%

b.

14% to 24%

c.

4% to 10%

d.

4% to 14%

Feedback

Your answer is correct.

The correct answer is: 4% to 14%

Question text

Natural gas is composed mainly of:

Select one:

a.

propane

b.

butane

c.

methane

d.

carbon dioxide

Feedback

Your answer is correct.

The correct answer is: methane

Question text

The relative density of propane vapour is approximately:

Select one:

a.

1.5

b.

0.8

c.

0.6

d.

2.0

Feedback

Your answer is correct.

The correct answer is: 1.5

Question text

What is the calorific value of Butane gas?

Select one:

a.

1,200Btu/Ft.3(.352kW/Ft.3)1,200Btu/Ft.3(.352kW/Ft.3)

b.

1,050Btu/Ft.3(.308kW/Ft.3)1,050Btu/Ft.3(.308kW/Ft.3)

c.

3,200Btu/Ft.3(.938kW/Ft.3)3,200Btu/Ft.3(.938kW/Ft.3)

d.

2,500Btu/Ft.3(.733kW/Ft.3)2,500Btu/Ft.3(.733kW/Ft.3)

Feedback

Your answer is correct.

The correct answer is: 3,200Btu/Ft.3(.938kW/Ft.3)3,200Btu/Ft.3(.938kW/Ft.3)

Question text

The heat generated by the complete combustion of a unit of fuel is commonly referred to as its:

Select one:

a.

distillation value

b.

combustion value

c.

flash value

d.

calorific value

Feedback

Your answer is correct.

The correct answer is: calorific value

Question text

Which of the following gases has the highest calorific value?

Select one:

a.

Natural Gas

b.

Carbon monoxide

c.

Butane

d.

Propane

Feedback

Your answer is correct.

The correct answer is: Butane

Question text

Natural gas must be preheated to approximately _____ ºF before it will ignite.

Select one:

a.

3,500

b.

212

c.

1,200

d.

1,000

Feedback

Your answer is correct.

The correct answer is: 1,200

Question text

The flame temperature of natural gas is approximately _____ ºF.

Select one:

a.

212

b.

1,000

c.

3,500

d.

1,200

Feedback

Your answer is incorrect.

The correct answer is: 3,500

Question text

The calorific value (heat value) of natural gas is approximately:

Select one:

a.

1,000Btu/Ft.3(10.35kW/m3)1,000Btu/Ft.3(10.35kW/m3)

b.

2,500Btu/Ft.3(26kW/m3)2,500Btu/Ft.3(26kW/m3)

c.

3,200Btu/Ft.3(33kW/m3)3,200Btu/Ft.3(33kW/m3)

d.

500Btu/Ft.3(5.17kW/m3)500Btu/Ft.3(5.17kW/m3)

Feedback

Your answer is correct.

The correct answer is: 1,000Btu/Ft.3(10.35kW/m3)1,000Btu/Ft.3(10.35kW/m3)

Question 28

Question text

The specific gravity of a gas is the:

Select one:

a.

weight of a gas as compared to an equal volume of air

b.

heat in the gas

c.

weight of a gas as compared to an equal volume of water

d.

volume of the gas

Feedback

Your answer is incorrect.

The correct answer is: weight of a gas as compared to an equal volume of air

Skip to main content

Side panel

Question text

How much Methane does Natural gas contain as a percentage (%) ?

Select one:

a.

80 to 95 %

b.

50 to 60%

c.

60 to 70 %

d.

100%

Feedback

Your answer is correct.

The correct answer is: 80 to 95 %

Question text

Is natural gas in its pure state a toxic gas? (type yes or no) Answer no

Feedback

The correct answer is: No

Question **3**

Question text

For the following questions you can type in the chemical formulas as follows (eg water = H2o) do not include spaces in your answers.

List the chemical formula for Natural Gas. Answer ch4

Feedback

The correct answer is: CH4

Question text

List the chemical formula for Propane. Answer c3h8

Feedback

The correct answer is: C3H8

Question text

List the chemical formula for Butane. Answer c4h10

Feedback

The correct answer is: C4H10

Question text

List the chemical formula for Carbon monoxide. Answer co2

Feedback

The correct answer is: CO

Question text

List the chemical formula for Carbon dioxide. Answer co2

Feedback

The correct answer is: CO2

Question text

List the chemical formula for Methane. Answer mo

Feedback

The correct answer is: CH4

Question text

List the chemical formula for Oxygen. Answer o2

Feedback

The correct answer is: O2

Question text

The ratio of the weight of a given volume of gas to the weight of an equal volume of air measured at standard temperature and pressure (60ºF @ 14.73 Psi or 15ºC @ 101.325 kPa). This is a description of...

Select one:

a.

Relative Heat

b.

Weight of a substance compared to the density of Hg

c.

Relative Volume

d.

Relative Density

Feedback

Your answer is incorrect.

The correct answer is: Relative Density

Question **11**

Question text

The total heat energy produced when a given volume of fuel is subjected to combustion.

Select one:

a.

Specific Heat

b.

Calorific Capacity

c.

Heating Value

d.

Combustion Capacity

Feedback

Your answer is incorrect.

The correct answer is: Heating Value

Question text

When one cubic foot of natural gas is burned it will produce Answer 1000 British Thermal Units.

Feedback

The correct answer is: 1000

Question **13**

Question text

Having any lesser amount of fuel than the lower flammable limit, a mixture would be Answer less and would not burn.

Feedback

The correct answer is: lean

Question text

Which of the following is used to odourize natural gas?

Select one:

a.

Sulphur

b.

Citric Acid

c.

Onion Oil

d.

Mercaptan

Feedback

Your answer is incorrect.

The correct answer is: Mercaptan

Question text

Natural gas must be readily detectable when _____ of the fuel gas per volume is present.

Select one:

a.

less than 10%

b.

more than 10%

c.

less than 1%

d.

any amount

Feedback

Your answer is incorrect.

The correct answer is: less than 1%

Question text

At standard atmospheric pressure, 14.73 Psi (101.325 kPa), the boiling point of propane is Answer 2500 . Answer in Fahrenheit as ###F (including the letter "F") .

Feedback

-44 F

or

-42 C

The correct answer is: -44F

Question text

Fuel gases are usually transported and stored in liquid state rather than as a gas due to the following:

(C3H8) 270 times more fuel can be stored in the same space.

(C4H10) 235 times more fuel can be stored in the same space.

Select one:

True

False

Feedback
The correct answer is 'True'.

Question text
The limits of flammability of propane gas in air are approximately:

Select one:

a.

2.5% to 9.5%

b.

4.6% to 14%

c.

5% to 15.3%

d.

10% to 45%

Feedback
Your answer is correct.

The correct answer is: 2.5% to 9.5%

Question text
Identify the limits of flammability for natural gas in air:

Select one:

a.

6% to 12%

b.

14% to 24%

c.

4% to 10%

d.

4% to 14%

Feedback

Your answer is correct.

The correct answer is: 4% to 14%

Question text

Natural gas is composed mainly of:

Select one:

a.

propane

b.

butane

c.

methane

d.

carbon dioxide

Feedback

Your answer is correct.

The correct answer is: methane

Question text

The relative density of propane vapour is approximately:

Select one:

a.

1.5

b.

0.8

c.

0.6

d.

2.0

Feedback

Your answer is correct.

The correct answer is: 1.5

Question text

What is the calorific value of Butane gas?

Select one:

a.

1,200Btu/Ft.3(.352kW/Ft.3)1,200Btu/Ft.3(.352kW/Ft.3)

b.

1,050Btu/Ft.3(.308kW/Ft.3)1,050Btu/Ft.3(.308kW/Ft.3)

c.

3,200Btu/Ft.3(.938kW/Ft.3)3,200Btu/Ft.3(.938kW/Ft.3)

d.

2,500Btu/Ft.3(.733kW/Ft.3)2,500Btu/Ft.3(.733kW/Ft.3)

Feedback

Your answer is correct.

The correct answer is: 3,200Btu/Ft.3(.938kW/Ft.3)3,200Btu/Ft.3(.938kW/Ft.3)

Question text

The heat generated by the complete combustion of a unit of fuel is commonly referred to as its:

Select one:

a.

distillation value

b.

combustion value

c.

flash value

d.

calorific value

Feedback

Your answer is correct.

The correct answer is: calorific value

Question text

Which of the following gases has the highest calorific value?

Select one:

a.

Natural Gas

b.

Carbon monoxide

c.

Butane

d.

Propane

Feedback

Your answer is correct.

The correct answer is: Butane

Question text

Natural gas must be preheated to approximately _____ ºF before it will ignite.

Select one:

a.

3,500

b.

212

c.

1,200

d.

1,000

Feedback

Your answer is correct.

The correct answer is: 1,200

Question text

The flame temperature of natural gas is approximately _____ ºF.

Select one:

a.

212

b.

1,000

c.

3,500

d.

1,200

Feedback

Your answer is incorrect.

The correct answer is: 3,500

Question text

The calorific value (heat value) of natural gas is approximately:

Select one:

a.

1,000Btu/Ft.3(10.35kW/m3)1,000Btu/Ft.3(10.35kW/m3)

b.

2,500Btu/Ft.3(26kW/m3)2,500Btu/Ft.3(26kW/m3)

c.

3,200Btu/Ft.3(33kW/m3)3,200Btu/Ft.3(33kW/m3)

d.

500Btu/Ft.3(5.17kW/m3)500Btu/Ft.3(5.17kW/m3)

Feedback

Your answer is correct.

The correct answer is: 1,000Btu/Ft.3(10.35kW/m3)1,000Btu/Ft.3(10.35kW/m3)

Question text

The specific gravity of a gas is the:

Select one:

a.

weight of a gas as compared to an equal volume of air

b.

heat in the gas

c.

weight of a gas as compared to an equal volume of water

d.

volume of the gas

Feedback

Your answer is incorrect.

The correct answer is: weight of a gas as compared to an equal volume of air

The major interruption in fuel supply could stop production and result in what?

Select one:

a.

Minor economic losses

b.

Major economic losses

c.

Not a big deal

d.

Inconvenience

Feedback

Your answer is incorrect.

The correct answer is: Major economic losses

Question text

When is it practical to consider Bio-gas as a supplemental fuel source?

Select one:

a.

When supply exceeds demand

b.

When demand exceeds supply

c.

Bio-gas is hazardous and should never be used

d.

It is never practical

Feedback

Your answer is incorrect.

The correct answer is: When demand exceeds supply

Question text

When organic waste degrades what does it produce?

Select one:

a.

Water

b.

Energy

c.

Methane

d.

Carbon Dioxide

Feedback

Your answer is incorrect.

The correct answer is: Methane

Question text

What is the process of bacteria digesting organic material referred to as?

Select one:

a.

Energetic activity

b.

Aerobic activity

c.

Anaerobic digestion

d.

Process Digestion

Feedback

Your answer is incorrect.

The correct answer is: Anaerobic digestion

Question text

What is term used to describe separating methane from the bio-gas?

Select one:

a.

Scrubbing

b.

Manufacturing

c.

Sweeping

d.

Bleaching

Feedback

Your answer is incorrect.

The correct answer is: Scrubbing

Question text

Calculate the calorific value of a propane/air mixture with 65% propane.

Select one:

a.

1 500 Btu/cubic foot

b.

1 235 Btu/cubic foot

c.

1 750 Btu/cubic foot

d.

1 625 Btu/cubic foot

Feedback

Your answer is incorrect.

The correct answer is: 1 625 Btu/cubic foot

Question **7**

Question text

Calculate the specific gravity of a propane/air mixture with 65% propane.

Select one:

a.

1.342

b.

1.182

c.

1.338

d.

1.765

Feedback

Your answer is incorrect.

(65/100 x 1.52) + (35/100 x 1) = 1.338

The correct answer is: 1.338

Which type of gas meter would be suited for applications requiring a gas pressure rating of 300 or more PSIG?

Select one:

a.

Rotary meter

b.

Diaphragm meter

c.

Turbine meter

d.

All meters can easily handle 300 PSIG or more

Feedback
Your answer is incorrect.

The correct answer is: Turbine meter

Question text
Which type of gas meter is used mostly in residential markets?

Answer: Diaphragm meter

Feedback
Diaphragm or Bellows

The correct answer is: Diaphragm

Question text
Which of the following is not a function of the gas meter ?

Select one:

a.

Measuring input to appliances within building

b.

Measuring Gas consumption

c.

Identifying leaks

d.

Measuring Gas pressure

Feedback
Your answer is incorrect.

The correct answer is: Measuring Gas pressure

Question text
If no appliances in the building are firing and the gas meter is moving what can be assumed ?

Select one:

a.

The line pressure regulator has been left on

b.

The gas meter is faulty

c.

The service regulator has failed

d.

There is a leak somewhere in the system

Feedback
Your answer is incorrect.

The correct answer is: There is a leak somewhere in the system

Question text
The main purpose of a gas meter is to:

Select one:

a.

measure and record the gas flow

b.

restrict the flow of gas to the system

c.

prevent excessive gas flow to the system

d.

test the system for leaks

Feedback

Your answer is correct.

The correct answer is: measure and record the gas flow

Question text

Bellows-type gas meters are installed on:

Select one:

a.

domestic and commercial systems

b.

domestic system only

c.

industrial and commercial system

d.

industrial systems only

Feedback

Your answer is correct.

The correct answer is: domestic and commercial systems

Question text

Diaphragm meters can typically service systems up to a maximum flow capacity of _____.

Select one:

a.

15 000 CFH

b.

1000 CFH

c.

5000 CFH

d.

1500 CFH

Feedback

Your answer is correct.

The correct answer is: 5000 CFH

Question **8**

Question text

Test dials on meters can be used to do which of the following.

Select one:

a.

To test for leaks in the system.

b.

To test the meter for proper operation.

c.

To monitor and record flow rate.

d.

To determine the amount of gas consumed over a large period of time.

Feedback

Your answer is correct.

The correct answer is: To test for leaks in the system.

What are the acceptable range limits when comparing CLOCKED inputs to the manufacturer's RATED inputs ?

Select one:

a.
+/- 20 %

b.
10 % under-fired / 0 % over-fired

c.
10 % over-fired / 0 % under-fired

d.
0 % over-fired / 0 % over-fired

Feedback

Your answer is correct.

The correct answer is: 10 % under-fired / 0 % over-fired

Question text

Which of the following is the low pressure clocking formula ?

Select one:

a.
3600 secs / hr x test dial volume x calorific value / clocked input

b.
3600 secs / hr x test dial volume x calorific value / rated input

c.
sec / rev. x test dial volume x calorific value / 3600 sec / hr

d.
3600 secs / hr x test dial volume x calorific value / # sec / rev.

Feedback

Your answer is incorrect.

The correct answer is: 3600 secs / hr x test dial volume x calorific value / # sec / rev.

Question text

If a natural gas meter @ 7 inches water column pressure is used to clock an appliance and it takes 23 seconds for the 2 cubic foot test dial to make one revolution. What is the clocked input of this appliance if the calorific value of the gas is 1050 Btu's / feet ^{3} ? (To nearest whole number)

Answer: 328695

Feedback

3600 sec / hour ÷ 23 sec / rev. x 2 feet ^{3} x 1050 Btu's ^{3} / feet ^{3}

The correct answer is: 328696

Question text

The testing pressure and duration of the test for gas piping systems after appliances are connected is:

Select one:

a.
50 psi for 10 minutes

b.
normal working pressure for 24 hours

c.
1/2 Psi for 10 minutes

d.
normal working pressure for 10 minutes

Feedback

Your answer is correct.

B149.1 [6.22.3 (b & d)]

The correct answer is: normal working pressure for 10 minutes

Question text

A furnace fired on natural gas is clocked at 20 seconds for one revolution of a 0.05 cubic meter test dial. The pressure of the gas in the meter is 7 inches water column (1.74 kPa). Calorific value = 1,000 BtuFt.3BtuFt.3 (10.35 kW/m 3). The correct input is closest to:

Select one:

a.
93.15 Btu/h (0.027 kW)

b.
9,000 Btu/h (2.63 kW)

c.
320,000 Btu/h (93.6 kW)

d.
90,000 Btu/h (26.4 kW)

Feedback

Your answer is incorrect.

$3{,}600_{sec.hr.} 20_{sec.rev.} \times 0.05_{m3rev.} = 9_{m3hr}$ 3,600sec.hr.20sec.rev.×0.05m3rev.=9m3hr
$9_{m3hr.} \times 35{,}310_{Btum3} = 317{,}790 Btuh$ 9m3hr.×35,310Btum3=317,790Btuh

The correct answer is: 320,000 Btu/h (93.6 kW)

Question text

A 5 cubic foot test dial on a low pressure meter takes 30 seconds to make 1 complete revolution. The correct flow rate is closest to:

Select one:

a.
600 cubic feet/hour (16.80 $m_{3}m3$)

b.
120 cubic feet/hour (3.36 $m_{3}m3$)

c.
30 cubic feet/hour (0.85 $m_{3}m3$)

d.
750 cubic feet/hour (21.24 $m_{3}m3$)

Feedback

Your answer is correct.

$3{,}600_{sec.hr.} 30_{sec.rev.} \times 5_{ft.3rev.} = 600 CFH$ 3,600sec.hr.30sec.rev.×5ft.3rev.=600CFH

The correct answer is: 600 cubic feet/hour (16.80 $m_{3}m3$)

Question text

A low pressure meter set requires 32 seconds for a 0.05 m^3 test dial to make one revolution. The calorific value of the gas is 1,000 $BtuFt.^3$. The closest correct input is:

Select one:

a.
582,000 Btu/h

b.
1,986,948 Btu/h

c.
199,000 Btu/h

d.
56,250 Btu/h

Feedback

Your answer is incorrect.

$3{,}600_{sec.hr.}32_{sec.rev.}\times0.05_{m^3rev.}=5.625_{m^3hr.}$ 3,600sec.hr.32sec.rev.×0.05m3rev.=5.625m3hr.
$5.625_{m^3hr.}\times35{,}310_{Btum^3}=198{,}619Btuh$ 5.625m3hr.×35,310Btum3=198,619Btuh

The correct answer is: 199,000 Btu/h

Question text

A low pressure propane meter with a 1 cubic foot dial takes 25 seconds for a revolution. The correct input is closest to:

Select one:

a.
325,451 Btu/h (95.32 kW)

b.
403,200 Btu/h (118.09 kW)

c.
360,000 Btu/h (105.44 kW)

d.
151,200 btu/h (44.28 kW)

Feedback

Your answer is correct.

3,600sec.hr.25sec.rev.×1ft.3rev.=144CFH3,600sec.hr.25sec.rev.×1ft.3rev.=144CFH
144CFH×2,500Btuft.3=360,000Btuh144CFH×2,500Btuft.3=360,000Btuh

The correct answer is: 360,000 Btu/h (105.44 kW)

Question text

A furnace rated at 250,000 Btu/h (73.23 kW) is fired on natural gas. The calorific value = 1,000 BtuFt.3BtuFt.3 (10.35 kWm3kWm3). How long will it take the 5 cubic foot test dial to make one complete revolution on this low pressure meter?

Select one:

a.
180 seconds

b.
18 seconds

c.
100 seconds

d.
72 seconds

Feedback

Your answer is incorrect.

input=3,600sec.hr.×TD×C.V.Tsec.rev.input=3,600sec.hr.×TD×C.V.Tsec.rev.
Tsec.rev.=3,600sec.hr.×5ft.3rev.×1,000Btuft.3250,000BtuhTsec.rev.=3,600sec.hr.×5ft.3rev.×1,000Btuft.3250,000Btuh

The correct answer is: 72 seconds

Question text

Calculate the input for the following natural gas appliance:

- Calorific value of gas = 1,000 BtuFt.3BtuFt.3 (10.35 kWm3kWm3)
- Meter pressure = 7 inches water column (1.74 kPa)
- Manifold pressure = 5 inches water column (1.24 kPa)
- Local atmospheric pressure = 14.68 Psia
- Test dial = 1 Ft.^{3}
- One revolution of the test dial takes 31.5 seconds

Select one:

a.
115,428 Btu/h (33.81 kW)

b.
114,285 Btu/h (33.47 kW)

c.
119,999 Btu/h (35.15 kW)

d.
116,129 Btu/h (34.01 kW)

Feedback

Your answer is correct.

$3{,}600_{sec.rev.}31.5_{sec.rev.} \times 1_{ft.3rev.} \times 1{,}000_{Btuft.3} = 114{,}286Btuh$3,600sec.rev.31.5sec.rev.×1ft.3rev.×1,000Btuft.3=114,286Btuh

The correct answer is: 114,285 Btu/h (33.47 kW)

Question text

The purpose of clocking a meter by a gas fitter is:

Select one:

a.
solely used as a gas leak check

b.
to check how much gas is consumed in a month for billing purposes

c.
to see how long it takes the test dial to go around

d.
to determine how much gas an appliance consumes per hour

Feedback

Your answer is correct.

The correct answer is: to determine how much gas an appliance consumes per hour

Question text

Determine the number of seconds for one revolution of a 2 cubic foot test dial if the input is 302,400 Btuh, the meter pressure is 7 inches water column and the gas used has a calorific value of 1,050 $Btu_{Ft.3}$BtuFt.3.

Select one:

a.
4 seconds

b.
25 seconds

c.
28.5 seconds

d.
23.8 seconds

Feedback

Your answer is correct.

$3{,}600_{sec.hr.} \times 2_{ft.3rev.} \times 1{,}050_{Btuft.3} 302{,}400_{Btuh} = 25 sec. 3{,}600 sec.hr. \times 2 ft.3 rev. \times 1{,}050 Btuft.3 302{,}400 Btuh = 25 sec.$

The correct answer is: 25 seconds

Question text

A furnace fired on propane is clocked at 22 seconds on a 0.5 $Ft._3$Ft.3 test dial. The meter is low pressure. Its input will be closest to:

Select one:

a.
2,045,000 Btuh

b.
82,000 Btuh

c.
818,000 Btuh

d.
204,545 Btuh

Feedback

Your answer is correct.

$3{,}600_{sec.hr.} 22_{sec.rev.} \times 0.5_{ft.3rev.} \times 2{,}500_{Btuft.3} = 204{,}545 Btuh 3{,}600 sec.hr. 22 sec.rev. \times 0.5 ft.3 rev. \times 2{,}500 Btuft.3 = 204{,}545 Btuh$

The correct answer is: 204,545 Btuh

Question text

A low pressure meter set measuring natural gas requires 32 seconds for a 1/2 cubic meter test dial to make one revolution. The correct input is closest to:

Select one:

a.
56.25 kW

b.
582 kW

c.
56,250 kW

d.
582 Btuh

Feedback

Your answer is incorrect.

$3{,}600_{sec.hr.}32_{sec.rev.}\times 0.5 m3_{rev.}=56.25 m3_{hr.}$ 3,600sec.hr.32sec.rev.×0.5m3rev.=56.25m3hr.
$56.25 m3_{hr.}\times 10.35 kWm3=582.188 kWhr.$ 56.25m3hr.×10.35kWm3=582.188kWhr.

The correct answer is: 582 kW

Question text

After replacing a hot water tank rated at 36,000 Btuh, the gas fitter must clock it. However, the furnace must stay on throughout the clocking procedure. Clocking only the furnace (rated at 120,000 Btuh), the test dial takes 150 seconds for one revolution (5 $Ft._3$Ft.3 test dial). With both units firing, the time per revolution drops to 116 seconds. Using natural gas, if the meter is a low-pressure meter, we can conclude that:

Select one:

a.
the hot water tank is overfired

b.
both units are underfired

c.
the installation is acceptable

d.
the furnace is overfired

Feedback

Your answer is incorrect.

(Both Appliances
) 3,600sec.hr.116sec.rev.×5ft.3rev.×1,000Btuft.3=155,172Btuh3,600sec.hr.116sec.rev.×5ft.3rev.×1,000Btuft.3=155,172Btuh
(Furnace
) 3,600sec.hr.150sec.rev.×5ft.3rev.×1,000Btuft.3=120,000Btuh3,600sec.hr.150sec.rev.×5ft.3rev.×1,000Btuft.3=120,000Btuh
(Hot Water
Tank) 155,172Btuh−120,000Btuh=35,172Btuh155,172Btuh−120,000Btuh=35,172Btuh

The correct answer is: the installation is acceptable

Question text

An appliance fired on low pressure natural gas takes 27 seconds for one revolution of a 0.05 m3m3 test dial. Its input will be closest to:

Select one:

a.
6.67 kW

b.
13.24 kW

c.
235,000 Btuh

d.
167,000 Btuh

Feedback

Your answer is incorrect.

3,600sec.hr.27sec.rev.×0.05m3rev.×35,310Btum3=235,400Btuh3,600sec.hr.27sec.rev.×0.05m3rev.×35,310Btum3=235,400Btuh

The correct answer is: 235,000 Btuh

Question text

A furnace is certified to operate on propane with an input of 375,000 Btu/h at 10 inches water column. The gas has a calorific value of 2,500 Btu/Ft.3Btu/Ft.3. With the furnace operating, the meter is clocked and it takes 30 seconds for the 1 cubic foot test dial to make one complete revolution. From this, you can conclude that the appliance is:

Select one:

a.
firing at the correct input

b.
overfired by 20%

c.
underfired by 20%

d.
underfired by 80%

Feedback

Your answer is incorrect.

$3{,}600_{\text{sec.hr.}}30_{\text{sec.rev.}}\times 1_{\text{ft.3rev.}}\times 2{,}500_{\text{Btuft.3}}$3,600sec.hr.30sec.rev.×1ft.3rev.×2,500Btuft.3
$300{,}000_{\text{Btuh}}375{,}000_{\text{Btuh}}=80$300,000Btuh375,000Btuh=80 %

Which of the following is the pressure correction factor formula?

Select one:

a.
$\text{PCF}=_{\text{MeterPressure+LocalAtmosphericPressureStandardPressure}}$PCF=MeterPressure+LocalAtmosphericPressureStandardPressure

b.
$\text{PCF}=_{\text{MeterPressure}\times\text{AbsolutePressureSeaLevelPressure}}$PCF=MeterPressure×AbsolutePressureSeaLevelPressure

c.
$\text{PCF}=_{\text{MeterPressure}\times\text{StandardPressureLocalAtmosphericPressure}}$PCF=MeterPressure×StandardPressureLocalAtmosphericPressure

d.
$\text{PCF}=_{\text{MeterPressure+StandardPressureLocalAtmosphericPressure}}$PCF=MeterPressure+StandardPressureLocalAtmosphericPressure

Feedback

Your answer is correct.

The correct answer
is: $\text{PCF}=_{\text{MeterPressure+LocalAtmosphericPressureStandardPressure}}$PCF=MeterPressure+LocalAtmosphericPressureStandardPressure

Question text

Which of the following is the temperature correction factor formula?

Select one:

a.

TCF=GasTemp+460(273)StandardTemp+460(273)TCF=GasTemp+460(273)StandardTemp+460(273)

b. TCF=StandardTemp+460(273)StandardPressure+14.73TCF=StandardTemp+460(273)StandardPressure+14.73

c. TCF=StandardPressure+14.73StandardTemp+460(273)TCF=StandardPressure+14.73StandardTemp+460(273)

d. TCF=StandardTemp+460(273)GasTemp+460(273)TCF=StandardTemp+460(273)GasTemp+460(273)

Feedback

Your answer is correct.

The correct answer is: TCF=StandardTemp+460(273)GasTemp+460(273)TCF=StandardTemp+460(273)GasTemp+460(273)

Question text

Simply stated, Boyle's Law says that if the pressure exerted upon a gas increases, its volume will Answer decreases .

Feedback

The correct answer is: decrease

Flag question

Question text

Simply stated, Charles' Law says that if the temperature exerted upon a gas increases, its volume will Answer increase .

Feedback

The correct answer is: increase

Question text

Which type of meter has the correction factor stamped on a brass tag attached to the meter? Answer compensat

Feedback

The correct answer is: Pressure Factor Measurement

Question text

Clock the input using the following information:

- Test Dial = 5 $Ft._3Ft.3$
- Time for One Revolution = 15 seconds
- Gas = Natural
- Local Atmospheric Pressure = 14.28 Psi
- Meter Pressure = 10 Psi

Input = Answer 1597200 Btuh

Feedback

input

$= 3{,}600_{sec.hr.}15_{sec.rev.} \times 5_{ft.3rev.} \times (10Psig+14.28Psi14.73Psia) \times 1{,}000_{Btuft.3}$ 3,600sec.hr.15sec.rev.×5ft.3rev.×(10Psig+14.28Psi14.73Psia)×1,000Btuft.3

The correct answer is: 1977600

Question text

Determine the input to the appliance if:

- Seconds per revolution = 17
- Gas temperature = 22ºF
- Test dial = 5 $Ft._3Ft.3$
- Gas = Natural
- Local Atmospheric Pressure = 14.56 Psi
- Meter Pressure = 20 Psi
- Meter not temperature compensated

Input = Answer 2475720 Btuh

Feedback

Input

$= 3{,}600_{sec.hr.}17_{sec.rev.} \times 5_{ft.3hr.} \times (20Psig+14.56Psi14.73Psia) \times (60F+46022F+460) \times 1{,}000_{Btuft.3}$ 3,600sec.hr.17sec.rev.×5ft.3hr.×(20Psig+14.56Psi14.73Psia)×(60F+46022F+460)×1,000Btuft.3

The correct answer is: 2680236

Question text

Given a closed container in which there is 16 cubic feet of air at 35 Psig, what will the volume of air be if water is forced into the container until the pressure becomes 105 Psig?

V_2V2 = Answer ft.3ft.3

Feedback

$V_2=V_1P_1P_2V2=V1P1P2$

$V_2=16ft.3 \times (35Psig+14.73psi)(105psig+14.73psi)V2=16ft.3 \times (35Psig+14.73psi)(105psig+14.73psi)$

The correct answer is: 6.65

Question text

What will the volume be if the 920 cubic inches of gas is cooled from 16ºC to -7ºC ? (to 2 decimals)

V_2V2 = Answer 848.49 $in.^3$in.3

Feedback

$V_2=\frac{V_1T_2}{T_1}$V2=V1T2T1

$V_2=\frac{920in.^3\times(-7ºC+273)}{(16ºC+273)}$V2=920in.3×(−7ºC+273)(16ºC+273)

The correct answer is: 846.78

Question text

If 310 cubic feet of oxygen is under a pressure of 50 Psig, to what gauge pressure must the gas be compressed so that it fits into a 15 cubic foot cylinder? (to 2 decimals)

P_2P2 = Answer 4 psigpsig

Feedback

$P_2=\frac{V_1P_1}{V_2}$P2=V1P1V2

$P_2=\frac{310ft.^3\times(50psig+14.73psi)}{15ft.^3}$P2=310ft.3×(50psig+14.73psi)15ft.3

$P_2=1{,}337.75psia-14.73psi$P2=1,337.75psia−14.73psi

The correct answer is: 1323.02

Question text

An 8 cubic foot air chamber at 40 Psig is released into the atmosphere. What volume will the released air have? (to 2 decimals)

V_2V2 Answer 29.77 $ft.^3$ft.3

Feedback

$V_2=\frac{V_1P_1}{P_2}$V2=V1P1P2

$V_2=\frac{8ft.^3\times(40psig+14.73psi)}{14.73Psia}$V2=8ft.3×(40psig+14.73psi)14.73Psia

The correct answer is: 29.72

Question text

A gas measures 920 cubic inches at 60ºF. What is its volume at 93ºF?

V_2V2 = Answer 865.09 $in.^3$in.3

Feedback

$V_2=\frac{V_1T_2}{T_1}$V2=V1T2T1

$V_2=\frac{920in.^3\times(93F+460)}{(60F+460)}$V2=920in.3×(93F+460)(60F+460)

The correct answer is: 978.38

Question text

Which of the following is the combined gas law formula?

Select one:

a.
$V_1T_1P_1=V_2T_2P_2$V1T1P1=V2T2P2

b.
$V_1P_1T_1=V_2P_2T_2$V1P1T1=V2P2T2

c.
V1P1T1=V2P2T2V1P1T1=V2P2T2

d.
$T_1P_1V_1=T_2P_2V_2$T1P1V1=T2P2V2

Feedback

Your answer is incorrect.

The correct answer is: $V_1P_1T_1=V_2P_2T_2$V1P1T1=V2P2T2

Question text

All gases expand the same amount when heated one degree.

Select one:

True

False

Feedback

The correct answer is 'True'.

Question text

The test dials are timed on a gas meter that is recording a flow rate of gas at pressures more than 1/2 Psi (3.45 kPa). If no allowance is made for the compression of the gas because of the pressure, the volume of flow indicated by the test dials will:

Select one:

a.
indicate the exact Btu input to the combustion chamber

b.
indicate the unit is overfired

c.
be the volume of fuel gas expressed in SCFH entering the combustion chamber

d.
indicate the unit is underfired

Feedback

Your answer is incorrect.

The correct answer is: indicate the unit is underfired

Question text

The correction factor of 1.679 would be used for a system operating at:

Select one:

a.
5 psig (34 kPa)

b.
10 psig (70 kPa)

c.
20 psig (140 kPa)

d.
2 psig (14 kPa)

Feedback

Your answer is incorrect.

PCF=MeterPressure+LocalAtmosphericPressureStandardPressurePCF=MeterPressure+LocalAtmosphericPressureStandardPressure
MeterPressure=PCF×StandardPressure−LocalAtmosphericPressureMeterPressure=PCF×StandardPressure−LocalAtmosphericPressure
MeterPressure=1.679×14.73psia−14.73psiaMeterPressure=1.679×14.73psia−14.73psia
MeterPressure=10psigMeterPressure=10psig

The correct answer is: 10 psig (70 kPa)

Question text

calculate the input to an appliance by using the following information:

- Local atmospheric pressure = 14.60 Psi
- Gas service line pressure = 60 Psig
- Gas pressure through the meter = 10 Psig
- House line pressure = 2 Psig
- Appliance manifold pressure = 5 inches water column
- Test dial = 0.05 m3m3

Test dial completes one revolution in 1 minute. Calorific value of gas = 1,000 Btu/Ft.3)(10.35\(kW/m3Btu/Ft.3)(10.35\(kW/m3). The correct input is closest to which one of the following?

Select one:

a.
177,000 Btu/h (51.8 kW)

b.
536,000 Btu/h (156.9 kW)

c.
300,000 Btu/h (87.9 kW)

d.
106,000 Btu/h (31 kW)

Feedback

Your answer is incorrect.

$\frac{3{,}600\,\text{sec.hr.}}{60\,\text{sec.rev.}} \times 0.05\,\text{m}^3\text{rev.} \times (10\,\text{psig} + 14.6\,\text{psi} 14.73\,\text{psia}) \times 35{,}310\,\text{Btu}\text{m}^3 = 176{,}903\,\text{Btuh}$ $\frac{3{,}600\,\text{sec.hr.}}{60\,\text{sec.rev.}} \times 0.05\,\text{m3rev.} \times (10\,\text{psig} + 14.6\,\text{psi} 14.73\,\text{psia}) \times 35{,}310\,\text{Btum3} = 176{,}903\,\text{Btuh}$

The correct answer is: 177,000 Btu/h (51.8 kW)

Marked out of 1.00

Question text

Calculate the clocked input to the following boiler. The boiler has a rated input of 1,000,000 Btu/h (292.2 kW). it has four burners and operates at a manifold pressure of 7 inches water column (1.74 kPa). The fuel is natural gas with a calorific value of 1,050 Btu/Ft.^3 Btu/Ft.3 (10.84 kW/m^3 kW/m3). The building is at sea level (14.73 Psi) and is supplied with 5 Psig (34 kPa) at the meter. One revolution of the 0.1 m^3 m3 test dial takes 26 seconds. The clocked input of the boiler is closest to which one of the following?

Select one:

a.
520,000 Btu/h (152 kW)

b.
688,000 Btu/h (201 kW)

c.
490,000 Btu\h (143 kW)

d.
750,000 Btu/h (220 kW)

Feedback

Your answer is incorrect.

3,600sec.hr.26sec.rev.×0.1m3rev.×35.31ft.3m3×(5psig+14.73psi14.73psia)×1,050Btuft.3=687,380Btuh3,600sec.hr.26sec.rev.×0.1m3rev.×35.31ft.3m3×(5psig+14.73psi14.73psia)×1,050Btuft.3=687,380Btuh

The correct answer is: 688,000 Btu/h (201 kW)

Question text

Calculate the input to a burner that is fired on a 50% butane-air mixture if it takes 48 seconds for the 2 ft.3ft.3 test dial to complete one revolution. The gas meter has an operating pressure of 5 Psig:

Select one:

a.
240,000 Btuh

b.
480,000 Btuh

c.
643,000 Btuh

d.
321,000 Btuh

Feedback

Your answer is incorrect.

3,600sec.hr.48sec.rev.×2ft.3rev.×(5psig+14.73psi14.73psia)×1,600Btuft.3=321,360Btuh3,600sec.hr.48sec.rev.×2ft.3rev.×(5psig+14.73psi14.73psia)×1,600Btuft.3=321,360Btuh

The correct answer is: 321,000 Btuh

Question text

Determine the input to a appliance under the following conditions (choose the closest answer):

- Service pressure = 60 Psig
- Local atmospheric pressure = 13.38 Psi
- Seconds/revolution = 18
- Meter pressure = 5 psig
- manifold pressure =7 inches water column
- Test dial = 0.05 m3/rev.m3/rev.
- Building line pressure = 2 Psig
- Truck in the driveway = Green
- Weather = Partly Cloudy
- Gas = 1,050 Btu/Ft.3Btu/Ft.3

Select one:

a.
496,000 Btuh

b.
463,000 Btuh

c.
420,000 Btuh

d.
131,000 Btuh

Feedback

Your answer is incorrect.

$3{,}600\frac{sec.}{hr.}\frac{18sec.}{rev.}\times 0.05\frac{m^3}{rev.}\times(5Psig+13.38Psi14.73Psia)\times 35.31\frac{ft.^3}{m^3}\times 1{,}050\frac{Btu}{ft.^3}=462{,}702Btuh$ 3,600sec.hr.18sec.rev.×0.05m3rev.×(5Psig+13.38Psi14.73Psia)×35.31ft.3m3×1,050Btuft.3=462,702 Btuh

The correct answer is: 463,000 Btuh

Question text

Calculate the input (to the closest answer) using the following information:

- Service Pressure = 60 Psig
- Meter pressure = 5 Psig
- Manifold pressure = 3.5 inches water column
- Test dial size = (5 cubic ft)
- Seconds/revolution = 20
- Calorific value = 1,000 $Btu/Ft.^3$Btu/Ft.3

Select one:

a.
1,205,000 Btuh

b.
4,566,000 Btuh

c.
6,300,000 Btuh

d.
900,000 Btuh

Feedback

Your answer is incorrect.

$3{,}600\frac{sec.}{hr.}\times 20\frac{sec.}{rev.}\times 5\frac{ft.^3}{rev.}\times(5Psig+14.73Psi-14.73Psia)\times 1{,}000\frac{Btu}{ft.^3}=1{,}205{,}100Btuh$

The correct answer is: 1,205,000 Btuh

Question text

An appliance is clocked on a 2 Psi meter set without correcting for the pressure. The result will be:

Select one:

a.
the appliance clocked input will be correct

b.
there is no need to clock any appliance if 2 Psi gas is used

c.
the appliance will appear to be overfired

d.
the appliance will appear to be underfired

Feedback

Your answer is incorrect.

The correct answer is: the appliance will appear to be underfired

Which of the following is not a type of burner orifice ?

Select one:

a.
Adjustable

b.
Cap / Universal

c.
Fixed

d.
Modulating

Feedback

Your answer is correct.

The correct answer is: Modulating

Question text

Which orifice would be used in a DUAL FUEL appliance (natural gas / propane) ?

Select one:

a.
Fixed

b.
Modulating

c.
Cap / Universal

d.
Adjustable

Feedback

Your answer is incorrect.

The correct answer is: Cap / Universal

Question text

Referencing the multiplier table A.15 (B149.1 Gas Code)

What is the multiplier for air ?

Select one:

a.
Not listed

b.
1

c.
0.6

d.
0.775

Feedback

Your answer is correct.

The correct answer is: 0.775

Question text

What size orifices would be required to fire a 65000 BTUH (natural gas) furnace with 3 burners at 3 inches water column manifold pressure ?

Select one:

a.
44

b.
43

c.
3/32 inch

d.
42

Feedback

Your answer is correct.

65000 / 1000 ÷ 3 burner = 21.668 CFH / Per burner

21.667 CFH @ 3 inch WC = 43 (20.76 CFH)

The correct answer is: 43

Question text

Calculate the orifice flow rate and size for each of the following appliances fired on natural gas:

Question text

An appliance is found to have a #51 orifice installed in each of its 4 burners. If fired on propane at 11 in. w.c. pressure, what would the input be? Answer 127500 Btuh

Feedback

Propane #51 @ 11" w.c. = 13.37$_{CFHorifice}$13.37CFHorifice 13.37$_{CFHorifice}$×4 Burners×2,500$_{Btuft.3}$=133,700Btuh13.37CFHorifice×4 Burners×2,500Btuft.3=133,700Btuh

The correct answer is: 133700

Question text

To change the fuel on an appliance from natural gas to propane which of the following would be done ?

Select one:

a.
Install smaller orifices , increase manifold pressure

b.
Install larger orifice , increase manifold pressure

c.
Install smaller orifice , decrease manifold pressure

d.
Install larger orifice , decrease manifold pressure

Feedback

Your answer is incorrect.

The correct answer is: Install smaller orifices , increase manifold pressure

Question text

An appliance with 5 burners is using propane at 11 inches w.c. manifold pressure. The orifice size used is found to be a #50. What would the input to this appliance be? Answer 72950 Btuh

Feedback

Propane #50 @ 11" w.c. = 14.59$_{CFHorifice}$14.59CFHorifice
input = 14.59$_{CFHorifice}$×5 Burners×2,500$_{Btuft.3}$14.59CFHorifice×5 Burners×2,500Btuft.3

The correct answer is: 182375

Question text

In the diagram below, the device shown is:

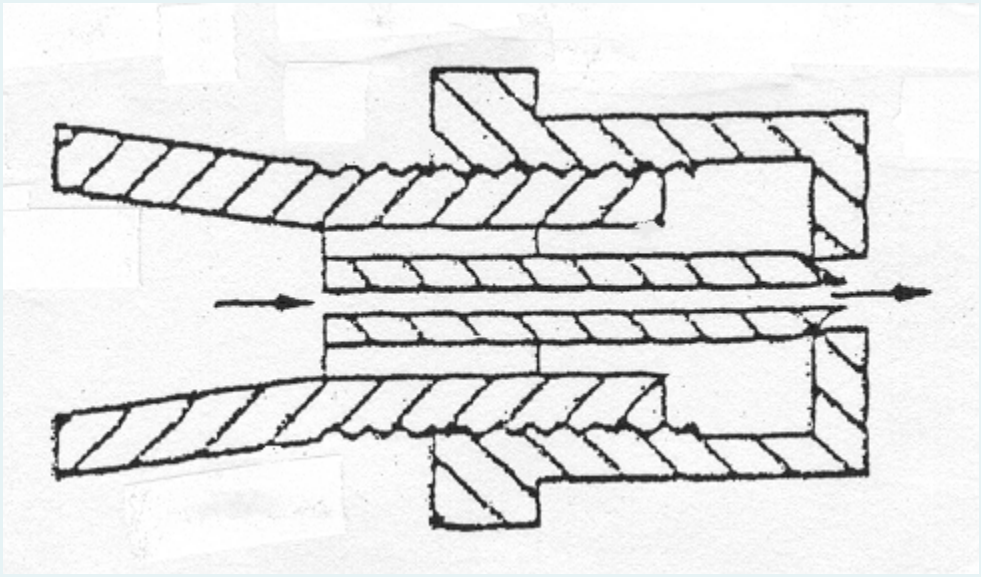

Select one:

a.
a universal main burner orifice adjusted for natural gas operation

b.
an insert type pilot orifice

c.
a universal main burner orifice adjusted for propane operation

d.
a spud type pilot orifice

Feedback

Your answer is correct.

The correct answer is: a universal main burner orifice adjusted for propane operation

Question text

If the cross-sectional area of an orifice is doubled, the flow rate will be increased by:

Select one:

a.
half the original flow rate

b.
twice the original flow rate

c.
four times the original flow rate

d.
eight times the original flow rate

Feedback

Your answer is correct.

The correct answer is: twice the original flow rate

Question text

A natural gas boiler is equipped with 20 burners and fires at a manifold pressure of 3.5 in. w.c. It is determined with the use of orifice drills that each orifice is a #50. The calorific value of gas burned s 1,070 Btu/Ft.3Btu/Ft.3. The firing rate of the boiler will be closest to:

Select one:

a.
257,000 Btuh

b.
15,000 Btuh

c.
278,000 Btuh

d.
298,000 Btuh

Feedback

Your answer is incorrect.

Natural Gas #50 @ 3.5" w.c. = 13.87$_{CFHorifice}$13.87CFHorifice
Input = 13.87$_{CFHorifice}$×20 Burners×1,070$_{Btuft.3}$13.87CFHorifice×20 Burners×1,070Btuft.3

The correct answer is: 298,000 Btuh

Question text

A Natural Gas appliance has a rated input of 140 MBH. If the appliance has four burners and operates at a manifold pressure of 7 inches water column, the correct orifice to fire the appliance to its rated input would be:

Select one:

a.
#41

b.
#42

c.
#43

d.
#13

Feedback

Your answer is correct.

140,000Btuh1,000$_{Btuft.3}$÷4 Burners=35$_{CFHorifice}$140,000Btuh1,000Btuft.3÷4 Burners=35CFHorifice
35$_{CFHorifice}$@7"w.c.35CFHorifice@7"w.c. = # 43

The correct answer is: #43

Question text

An appliance equipped with three burners and using natural gas at 3.5 inches water column pressure, has a rated input of 300 MBH. Select the orifices required:

Select one:

a.
#13

b.
3/16"

c.
#14

d.
#12

Feedback

Your answer is correct.

$300{,}000\text{Btuh}1{,}000_{\text{Btuft.3}}$÷3 burners=100Btuorifice300,000Btuh1,000Btuft.3÷3 burners=100Btuorifice 100CFHorifice@3.5"w.c.=316"100CFHorifice@3.5"w.c.=316"

The correct answer is: 3/16"

Question text

A 375 MBH appliance which is operated on propane, has four burners fired at 11 inches water column manifold pressure. Select the orifices required:

Select one:

a.
3/16"

b.
#34

c.
#54

d.
1/8"

Feedback

Your answer is incorrect.

375,000Btuh2,500Btuft.3÷4 Burners=37.5CFHorifice375,000Btuh2,500Btuft.3÷4 Burners=37.5CFHorifice
37.5CFHorifice@11"w.c.=37.5CFHorifice@11"w.c.= #34

The correct answer is: #34

Question text

Which orifice would have the highest flow rate?

Select one:

a.
#24 @ 4 inches water column

b.
#25 @ 4 inches water column

c.
#25 @ 3 inches water column

d.
#24 @ 3 inches water column

Feedback

Your answer is incorrect.

The correct answer is: #24 @ 4 inches water column

Question text

A propane-air mixture has a specific gravity of 1.3 and a calorific value of 1,250 Btu/Ft.3Btu/Ft.3. If an appliance has a rated input of 200 MBH and has five burners operating on 4 inches water column manifold pressure, what is the required orifice size?

Select one:

a.
#45

b.
#38

c.
#31

d.
#33

Feedback

Your answer is correct.

200,000Btuh1,250Btuft.3÷5 Burners=32CFHorifice200,000Btuh1,250Btuft.3÷5 Burners=32CFHorifice 32CFHorifice÷0.68(multiplierforSg.1.3)=47.06CFHorifice32CFHorifice÷0.68(multiplierforSg.1.3) =47.06CFHorifice
47.06CFHorifice@4"w.c.=47.06CFHorifice@4"w.c.= #31

The correct answer is: #31

Question text

An appliance has a high altitude rating of 245,500 Btuh and a sea level rating of 337,750 Btuh. Match the calculated de-rated inputs to the given elevations if they were installed at these elevations.

9,600 Ft. Answer 1
337,750 Btuh

6,600 Ft. Answer 2
245,500 Btuh

2,100 Ft. Answer 3
216,040 Btuh

375 Ft. Answer 4
186,580 Btuh

Feedback

Your answer is incorrect.

The correct answer is: 9,600 Ft. → 186,580 Btuh, 6,600 Ft. → 216,040 Btuh, 2,100 Ft. → 245,500 Btuh, 375 Ft. → 337,750 Btuh

Question text

A boiler certified for high altitude is installed at an elevation of 5,500 feet. The rating plate indicates a sea level rating of 150,000 Btuh and a high altitude rating of 130,000 Btuh. The boiler should be adjusted to an input of:

Select one:

a.
150,000 Btuh

b.
130,000 Btuh

c.
124,800 Btuh

d.

109,200 Btuh

Feedback

Your answer is incorrect.

130,000 Btuh - 4% = 124,800 Btuh

The correct answer is: 124,800 Btuh

Question text

To double the gas flow through the orifice of an atmospheric burner, the manifold pressure shall be increased by:

Select one:

a.
50%

b.
four times

c.
double

d.
three times

Feedback

Your answer is incorrect.

$Q=\Delta P---\sqrt{Q=\Delta P}$
$2_2=\Delta P22=\Delta P$
$4=\Delta P4=\Delta P$

The correct answer is: four times

Question text

Find the orifice sizes required for the following appliances:

385,000 Btuh; Calorific Value = 1,050 $Btu/Ft._3Btu/Ft.3$; 5 Burners; Manifold Pressure = 3.5 inches water column; Specific Gravity = 0.6

Select one:

a.
#21

b.
#20

c.
#22

d.
#19

Feedback

Your answer is correct.

385,000Btuh1,050Btuft.3÷5 Burners=73.333CFHorifice385,000Btuh1,050Btuft.3÷5 Burners=73.333CFHorifice
73.333CFHorifice@3.5"w.c.=73.333CFHorifice@3.5"w.c.= #21

The correct answer is: #21

Question text

225,000 Btuh; Calorific Value = 1,350 Btu/Ft.3Btu/Ft.3; 4 Burners; Manifold Pressure = 4 inches water column; Specific Gravity = 1.2

Select one:

a.
#30

b.
#31

c.
#28

d.
#29

Feedback

Your answer is correct.

225,000Btuh1,350Btuft.3÷4 Burners=41.667CFHorifice225,000Btuh1,350Btuft.3÷4 Burners=41.667CFHorifice
41.667CFHorifice÷0.707(multiplierforSg.)=58.934CFHorifice@"w.c.=41.667CFHorifice÷0.707(multiplierforSg.)=58.934CFHorifice@"w.c.= #29

The correct answer is: #29

Question text

1,300 MBH; Calorific Value = 985 Btu/Ft.3Btu/Ft.3; 10 Burners; Manifold Pressure = 3 inches water column; Specific Gravity = 0.9

Select one:

a.
C

b.
B

c.
D

d.
E

Feedback

Your answer is correct.

1,300,000Btuh985Btuft.3÷10 Burners=131.98CFHorifice1,300,000Btuh985Btuft.3÷10 Burners=131.98CFHorifice
131.98CFHorifice÷0.817(MultiplierforSg.)=161.542CFHorifice@3"w.c.="D"131.98CFHorifice÷0.817(MultiplierforSg.)=161.542CFHorifice@3"w.c.="D"

The correct answer is: D

Question text

475,000 Btuh; Calorific Value = 1,000 Btu/Ft.3Btu/Ft.3; 8 Burners; Manifold Pressure = 3.5 inches water column; Specific Gravity = 0.6

Select one:

a.
#29

b.
#28

c.
#27

d.
#26

Feedback

Your answer is correct.

475,000Btuh1,000Btuft.3÷8 Burners=59.375CFHorifice@3.5"w.c.=475,000Btuh1,000Btuft.3÷8 Burners=59.375CFHorifice@3.5"w.c.= #27

The correct answer is: #27

Question text

160,000 Btuh; Calorific Value = 1,250 Btu/Ft.3Btu/Ft.3; 4 Burners; Manifold Pressure = 5 inches water column; Specific Gravity = 0.8

Select one:

a.
#38

b.
#37

c.
#35

d.
#36

Feedback

Your answer is correct.

160,000Btuh1,250Btuft.3÷4 Burners=32CFHorifice160,000Btuh1,250Btuft.3÷4 Burners=32CFHorifice 32CFHorifice÷0.867(MultiplierforSg.)=36.909CFHorifice@5"w.c.=32CFHorifice÷0.867(MultiplierforSg.)=36.909CFHorifice@5"w.c.= #37

The correct answer is: #37

Question text

650,000 Btuh; Calorific Value = 1,070 Btu/Ft.3Btu/Ft.3; 6 Burners; Manifold Pressure = 3 inches water column; Specific Gravity = 0.8

Select one:

a.
#5

b.
#2

c.
#4

d.
#3

Feedback

Your answer is correct.

650,000Btuh1,070Btuft.3÷6 Burners=101.246CFHorifice650,000Btuh1,070Btuft.3÷6 Burners=101.246CFHorifice
101.246CFHorifice÷0.867(MultiplierforSg.)=116.778CFHorifice@3"w.c.=101.246CFHorifice÷0.867(MultiplierforSg.)=116.778CFHorifice@3"w.c.=

The correct answer is: #4

Question text

How much air could pass through a #40 orifice at 3.5 inches water column? Answer 271900 CFHorificeCFHorifice

Feedback

#40 @ 3.5" w.c.
= 27.19CFHorifice(NaturalGas)×0.775(MultiplierforSg.)=21.07CFHorifice27.19CFHorifice(NaturalGas)×0.775(MultiplierforSg.)=21.07CFHorifice

The correct answer is: 21.07

Question text

An appliance has a sea level rating of 250 MBH and a high altitude rating of 220 MBH. The rating plate specifies a manifold pressure of 3.5 inches water column. When you look in the combustion chamber, you notice 5 upshot multi-port burners. The fuel gas supplied to this appliance has a calorific value of 0.314 kW/ft.3kW/ft.3 and a specific gravity of 0.65. If you are installing this appliance at an elevation of 6,000 feet above sea level, what size of orifices would be required to fire the appliance to its rated input?

Select one:

a.
#32

b.
#31

c.
#34

d.
#33

Feedback

Your answer is incorrect.

220,000Btuh−8220,000Btuh−8 % =202,400Btuh=202,400Btuh
0.314kWft.3÷0.000293kWBtu=1,072Btuft.30.314kWft.3÷0.000293kWBtu=1,072Btuft.3
202,400Btuh1,072Btuft.3÷5 Burners=37.761CFHorifice202,400Btuh1,072Btuft.3÷5 Burners=37.761CFHorifice

37.761CFHorifice÷0.962(MultiplierforSg.)=39.253CFHorifice37.761CFHorifice÷0.962(MultiplierforSg.)=39.253CFHorifice
39.253CFHorifice@3.5"w.c.=39.253CFHorifice@3.5"w.c.= #32

The correct answer is: #32

The drawing below is of a propane:

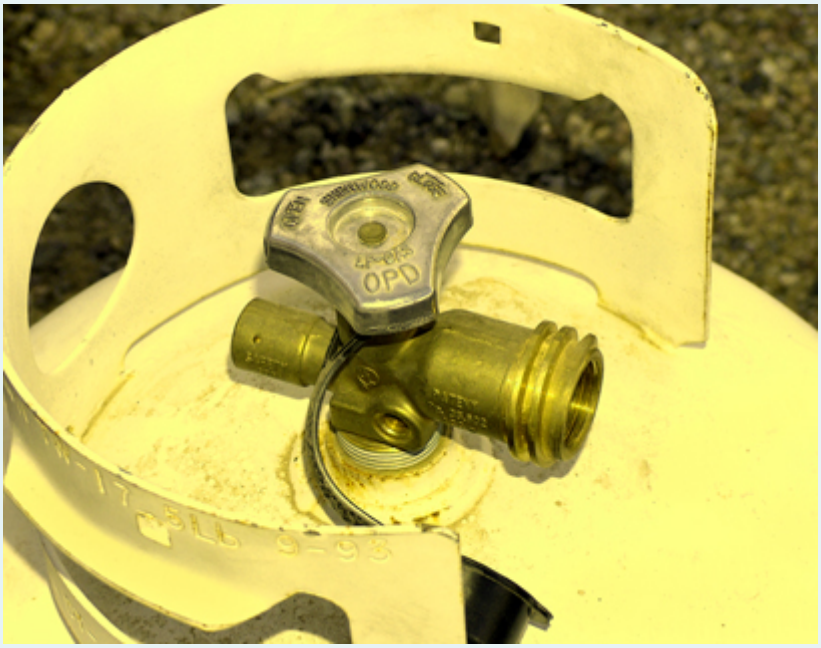

Select one:

a.

evacuation valve for large tanks

b.

valve with overfill protection device

c.

cylinder liquid withdrawal valve

d.

liquid withdrawal valve for a forklift

Feedback

Your answer is correct.

The correct answer is: valve with overfill protection device

Question text

The smallest size cylinder, known as a disposable type, is:

Select one:

a.

5 pounds

b.

10 pounds

c.

20 pounds

d.

1 pound

Feedback

Your answer is correct.

The correct answer is: 1 pound

Question text

What is the sum of all whole numbers from 1 to infinity? $\sum n=1\downarrow,\infty\uparrow\sum n=1\downarrow,\infty\uparrow$

Select one:

a.

Cannot be determined

b.

-1/12

c.

∞

d.

0

Feedback

Your answer is incorrect.

find the proof here if you're curious :

https://www.youtube.com/watch?v=w-I6XTVZXww

The correct answer is: -1/12

Question text

The largest size cylinder is:

Select one:

a.

1,000 pounds

b.

500 pounds

c.

100 pounds

d.

250 pounds

Feedback

Your answer is incorrect.

The correct answer is: 500 pounds

Question text

Liquid propane capacity is listed on tanks in:

Select one:

a.

pounds of propane

b.

pounds for small tanks and gallons for big tanks

c.

pounds or gallons of propane on all tanks

d.

gallons of water capacity

Feedback

Your answer is correct.

The correct answer is: gallons of water capacity

Question Question text

The type of thread connection found on the outlet of a vapour service valve is:

Select one:

a.

POL

b.

NPT

c.

BSPT

d.

NPS

Feedback
Your answer is correct.

The correct answer is: POL

Question text
The relief valve start-to-discharge pressure for a cylinder is:

Select one:

a.

312 Psig

b.

420 Psig

c.

250 Psig

d.

375 Psig

Feedback
Your answer is correct.

The correct answer is: 375 Psig

Question text
A data plate with construction information is found attached to:

Select one:

a.

cylinders and tanks

b.

cylinders

c.

tanks

d.

cylinders over 420 pounds capacity

Feedback

Your answer is correct.

The correct answer is: tanks

Question text

When calculating the *effective load* that an appliance will place on a propane container, which formula should be used?

Select one:

a.

Effective load = weight of propane X load factor

b.

Effective load = input X load factor

c.

Effective load = gallons of liquid propane X 91,500

d.

Effective load = Btu/H of input

Feedback

Your answer is correct.

The correct answer is: Effective load = input X load factor

Question text

Calculate the effective load on a propane container supplying a 100,000 Btu/h central heating furnace: Answer 50000 Btuh

Feedback

100,000 Btuh x 0.5 = 50,000 Btuh

The correct answer is: 50000

Question text

Calculate the effective load on a propane storage container for a 50,000 Btu/h construction heater: Answer 50000 Btu

Feedback

50,000 Btuh x 1 = 50,000 Btu

The correct answer is: 50000

Question text

A propane-fired furnace at 100,000 Btu/h and hot water tank at 40,000 Btu/h are connected to an above ground storage tank. If the lowest winter temperature in the area is 10ºF, calculate the size of the propane storage tank required at 75% humidity: Answer 1000 Gal. Tank

Feedback

Furnace 100,000 Btuh x 0.5 = 50,000 Btuh

Hot Water Tank 40,0000 Btuh x 0.16 = 6,400 Btuh

Total = 56,400 Btuh

56,400 Btuh @ 10ºF and 80% Humidity = 1,000 Gal. Tank

The correct answer is: 1000

he type of container usually considered portable would be a Cylinder .

Feedback

Your answer is correct.

The correct answer is:

The type of container usually considered portable would be a [Cylinder].

Question text

A 20lb propane cylinder would hold Answer 17 pounds of liquid propane.

Feedback

The correct answer is: 20

Question text

The density of liquid propane is Answer 493 lbs / cubic foot.

Feedback

The correct answer is: 31.8

Question text

The Tank weight of a cylinder is the weight of an empty cylinder with valve.

Feedback

Your answer is incorrect.

The correct answer is:

The [Tare] weight of a cylinder is the weight of an empty cylinder with valve.

Question text

The Gas in a propane cylinder will vary widely with ambient temperature.

Feedback

Your answer is incorrect.

The correct answer is: The [Pressure] in a propane cylinder will vary widely with ambient temperature.

Question text

The pressure relief valve setting on a propane cylinder is typically Answer 375 psig.

Feedback

The correct answer is: 375

Question text

The maximum permitted fill level of a propane cylinder Answer 80 percent.

Feedback

The correct answer is: 80

Question text

At atmospheric pressure , propane is found in what physical state ? Vapour

Feedback

Your answer is incorrect.

The correct answer is:

At atmospheric pressure , propane is found in what physical state ? [Gas]

Question text

Vaporization of gas creates a natural _____ effect.

Select one:

a.

Refrigeration

b.

Vapourization

c.

Heating

d.

Condensing

Feedback

Your answer is incorrect.

The correct answer is: Refrigeration

Question text

What name is given to the connection that is utilized for vapor service applications ?

Select one:

a.

P.O.L

b.

C.S.A

c.

M.V.P

d.

L.O.P

Feedback

Your answer is correct.

The correct answer is: P.O.L

Question text

The Wetted area of a container is the specific area that comes into contact with the LP gas liquid.

Feedback
Your answer is correct.

The correct answer is:

The [Wetted] area of a container is the specific area that comes into contact with the LP gas liquid.

Question text

The greater the wetter area the greater the Surface vaporization rate.

Feedback
Your answer is incorrect.

The correct answer is:

The greater the wetter area the greater the [Liquid] vaporization rate.

Question text

The largest portable LP gas container would be a Answer 260 pound cylinder.

Feedback
The correct answer is: 500

Given a closed container in which there is 16 cubic feet of air at 35 PSIG, what will the volume of air be if water is forced into the container until the pressure becomes 105 PSIG?

Answer cu.Ft

Feedback
V1P1 = V2P2

V2 = (V1P1)/P2

V2 = (16 x 49.73) / 119.73

V2 = 6.646 cu.Ft

Don't forget all pressures must be entered as PSI**A**

The correct answer is: 6.646

Marked out of 1.00

Question text
What will the volume be if 920 cubic inches of gas is cooled from 16C to -7C?

Answer cu.in

Feedback
V1/T1 = V2/T2

V2 = (V1T2) / T1

V2 = (920 x 266) / 289

V2 = 846.782 cu.in

The correct answer is: 846.782

Question text
If 310 cubic feet of oxygen is under a pressure of 50 PSIG, to what gauge pressure must the gas be compressed so that it fits into a 15 cubic foot cylinder?

Answer PSIG

Feedback
V1P1 = V2P2

P2 = (V1P1) / V2

P2 = (310 x 64.73) / 15

P2 = 1337.753 psia

PSIG = PSIA - Atmospheric Pressure

PSIG = 1337.753 - 14.73

PSIG = 1323.023

The correct answer is: 1323.023

Question text
An 8 cubic foot air chamber at 40 PSIG is released into the atmosphere. What volume will the released air have?

Answer cu.Ft

Feedback
V1P1 = V2P2

V2 = (V1P1)/P2

V2 = (8 x 54.73) / 14.73

V2 = 29.724 cu.Ft

Don't forget all pressures must be entered as PSI**A**

The correct answer is: 29.724

Question text
A gas measures 920 cubic inches at 60F. What is its volume at 93F?

Answer cu.in

Feedback
V1/T1 = V2/T2

V2 = (V1T2) / T1

V2 = (920 x 553) / 520

V2 = 978.385 cu.in

The correct answer is: 978.385

Question text

A compression tank in a hot water space heating system contains 4 cu.ft. at 5 PSIG. What will the pressure be when the air volume is 2 cu.ft.?

Answer PSIG

Feedback

V1P1 = V2P2

P2 = (V1P1) / V2

P2 = (4 x 19.73) / 2

P2 = 39.46 psia

PSIG = PSIA - Atmospheric Pressure

PSIG = 39.46 - 14.73

PSIG = 24.73

The correct answer is: 24.73

Question text

Select Boyles Law:

Select one:

a.

V1P1 = V2P2

b.

P1/T1 = P2/T2

c.

V1/P1 = V2/T2

d.

V1/T1 = V2/T2

Feedback

Your answer is incorrect.

The correct answer is: V1P1 = V2P2

Question text

Select Charles' Law I and II:

Select one or more:

a.

V1/P1 = V2/P2

b.

V1/T1 = V2/T2

c.

T1/P1 = T2/P2

d.

P1/V1 = P2/V2

e.

P1/T1 = P2/T2

Feedback

Your answer is incorrect.

CL #1 - P1/T1 = P2/T2

CL #2 - V1/T1 = V2/T2

The correct answers are: P1/T1 = P2/T2, V1/T1 = V2/T2

Question text

All gases expand the same amount when heated one degree.

Select one:

True

False

Feedback
The correct answer is 'True'.

Question text
The smallest size cylinder, known as a disposable type, is:

Select one:

a.

20 pounds

b.

10 pounds

c.

1 pound

d.

5 pounds

Feedback
Your answer is incorrect.

The correct answer is: 1 pound

Question text
The largest size cylinder is:

Select one:

a.

100 pounds

b.

1,000 pounds

c.

500 pounds

d.

250 pounds

Feedback
Your answer is incorrect.

The correct answer is: 500 pounds

Question text
Liquid propane capacity is listed on tanks in:

Select one:

a.

pounds for small tanks and gallons for big tanks

b.

pounds or gallons of propane on all tanks

c.

pounds of propane

d.

gallons of water capacity

Feedback
Your answer is incorrect.

The correct answer is: gallons of water capacity

Question text
The type of thread connection found on the outlet of a vapour service valve is:

Select one:

a.

POL

b.

NPS

c.

BSPT

d.

NPT

Feedback

Your answer is incorrect.

The correct answer is: POL

Question text

The relief valve start-to-discharge pressure for a cylinder is:

Select one:

a.

250 psig

b.

420 psig

c.

375 psig

d.

312 psig

Feedback
Your answer is incorrect.

The correct answer is: 375 psig

Question text
A data plate with construction information is found attached to:

Select one:

a.

cylinders

b.

cylinders over 420 pounds capacity

c.

tanks

d.

cylinders and tanks

Feedback
Your answer is incorrect.

The correct answer is: tanks

Question text
When calculating the effective load that an appliance will place on a propane container, which formula should be used?

Select one:

a.

Effective load = weight of propane x load factor

b.

Effective load = Btu/h of input

c.

Effective load – gallons of liquid propane x 91,500

d.

Effective load = input x load factor

Feedback

Your answer is incorrect.

The correct answer is: Effective load = input x load factor

Question text

Calculate the effective load on a propane container of a 100,000 Btu/h domestic furnace:

Answer Btuh

Feedback

Effective Load = 100,000 Btuh x 0.5 = 50,000 Btuh

The correct answer is: 50000

Question text

Calculate the effective load on a propane storage container of a 50,000 Btu/h construction heater:

Answer Btuh

Feedback

Effective Load = 50,000 Btuh x 1 = 50,000 Btuh

The correct answer is: 50000

Referring to the tables in the text. A propane-fired furnace at 100,000 Btu/h and hot water tank at 40,000 Btu/h are connected to an above ground storage tank. If the lowest winter temperatures in the area are 10F, calculate the size of the propane storage tank required (at 70% humidity):

Answer gallon tank

Feedback

100,000 Btuh x 0.5 = 50,000 Btuh

40,000 Btuh x 0.16 = 6,400 Btuh

Total = 56,400 Btuh

Table A-1 = 500 gallon tank

The correct answer is: 500

Question text

A storage type hot water tank rated at 35,000 Btu/h is designed to fire on low pressure natural gas (C.V. 1,050 Btu/cu.ft.). You clock the meter and find that it takes 50 seconds for one complete revolution of the 1/2 cubic foot test dial. This indicates that the appliance is:

Select one:

a.

over-firing and the orifice will have to be decreased in size

b.

under-fired and the orifice will have to be increased in size

c.

under-fired and the orifice will have to be decreased in size

d.

firing correctly and no adjustments are necessary

Feedback

Your answer is incorrect.

3600*sec/hr* ÷ 0.5*cu.Ft/rev* x 1050*Btu/cu.Ft* = **37800 Btuh**

The correct answer is: over-firing and the orifice will have to be decreased in size

Determine the input under the following conditions:

- Natural gas @ 1000 Btu/ cu ft
- 1.5 minutes per revolution
- 0.01 cu m test dial
- 4 inch water column manifold pressure
- 5 psig meter pressure
- 60 psig service pressure
- 14.36 psia local atmospheric pressure
- 60 degree F ambient

Answer:

Feedback

Input = $3600 \times testdialsec/rev \times calorificvalue \times PCF3600 \times testdialsec/rev \times calorificvalue \times PCF$ = $3600 \times 0.0190 \times 35310 \times 1.3143600 \times 0.0190 \times 35310 \times 1.314$

The correct answer is: 18559

Question text

Calculate the flow rate given the following conditions : (convert to standard conditions)

- Service pressure - 60 psig
- Meter pressure - 5 psig
- Manifold pressure - 7 inch water column
- Size of test dial - 5 cu ft
- Time per revolution - 1.5 minutes

Answer:

Feedback

Flow Rate

= secondperhour×testdialsecondsperrevolution×PCFsecondperhour×testdialsecondsperrevolution×PCF

= 3600×590×1.3393600×590×1.339

The correct answer is: 267.8

Question **3**

Question text

Calculate the input given the following conditions :

- Service pressure - 50 psig
- House pressure - 10 psig
- Meter pressure - 10 psig
- Test dial - 5 cu ft
- Time per revolution - 30 seconds
- Ambient temperature - 70 degree F
- Temperature of gas - 50 degree F
- Local barometric pressure - 14.69 psig

Calorific value - 1000 Btu/cu ft

Answer:

Feedback

Input = $\frac{3600 \times \; test \; dial}{sec \; / rev} \; \times \; calorific \; value \; \times PCF \times TCF$

$\frac{3600 \; \times \; 5}{30} \; \times 1000 \; \times 1.676 \; \times 1.020$

The correct answer is: 1025712

Question text

Calculate the time for one revolution of a 2 cu ft test dial given :

- Input - 1575 MBH
- Local barometric pressure - 14.25 psia
- Ambient temperature - 45 degree F
- Gas temperature - 50 degree F
- Calorific value of gas - 1050 Btu / cu ft
- Meter pressure - 10 psig

Answer:

Feedback

inp stand for = input

Input
$= 3600 \times testdialsec/rev \times calorificvalue \times PCF \times TCF 3600 \times testdialsec/rev \times calorificvalue \times PCF \times TCF$
$sec/rev = 3600 \times testdialinp \times calorificvalue \times PCF \times TCF 3600 \times testdialinp \times calorificvalue \times PCF \times TCF$
$= 3600 \times 21575000 \times 1050 \times 1.646 \times 1.019 3600 \times 21575000 \times 1050 \times 1.646 \times 1.019$

The correct answer is: 8

While clocking a boiler, the 0.05 cu m test dial takes 24 seconds for one revolution. The system is being supplied with natural gas at a calorific value of 1025 Btu/ cu ft. The pressure through the meter is 35 kPa. what is the input to the appliance in btu's?

Answer:

Feedback

Input $= 3600 \times testdialsec/rev \times calorificvalue \times PCF 3600 \times testdialsec/rev \times calorificvalue \times PCF$
$= 3600 \times 0.0524 \times 36193 \times 1.345 3600 \times 0.0524 \times 36193 \times 1.345$

The correct answer is: 365097

Flag question

Question text

A furnace is rated at 500 MBH and is fired on natural gas with a calorific value of 1000 Btu / cu ft. If you were to clock the 2 cu ft , how long would you expect the test dial to make one revolution? (assume low pressure).

Answer:

Feedback

Input = \(\frac{3600 \; \times \; test \; dial}{sec \; / rev} \; \times caloric \; value

sec / rev = \(\frac{3600 \; \times \; test \; dial}{inp} \; \times caloric \; value

sec / rev = \(\frac{3600 \; \times \; 2}{500000} \; \times 1000

The correct answer is: 14.4

Question **3**Question text

A viessmann vitrodens 200 wall-mounted condensing boiler is rated at 67 kW. Natural gas is supplied to the boiler at a calorific value of 1000 Btu/ cu ft. The manifold pressure is 3.5 inch water column and the pressure through the meter is 2 psi. It takes 19 seconds for the needle to go once around the 1 cu ft test dial. Is this unit overfired or underfired and by how much ?

Boiler Input

	Answer	Answer
Input =	Btuh	

Feedback

Input = 3600×testdialsecrev×calorificvalue×PCF3600×testdialsecrev×calorificvalue×PCF

= 3600×119×1000×1.1363600×119×1000×1.136

Question text

A john wood signature series commercial hot water tank is fired on propane with a calorific value of 0.738 kW/ ft. The 2 cu ft takes 80 seconds for one revolution through the 5 psi meter. What is the input to the boiler in kw/hr ?

Answer:

Feedback

Input = 3600×testdialsec/rev×calorificvalue×PCF3600×testdialsec/rev×calorificvalue×PCF

= 3600×280×0.738×1.3393600×280×0.738×1.339

The correct answer is: 89.94

What would the temperature correction factor be if the ambient temperature is 65 degree F and the temperature of the gas is 50 degree F.

Note : Temperature must be in absolute

Answer:

Feedback

TCF = standardtemperaturetemperatureofgasstandardtemperaturetemperatureofgas
= 60+46050+46060+46050+460

The correct answer is: 1.019

Question text

Calculate the input given the following conditions :

- House pressure - 5 psig
- Manifold pressure - 3.5 inches water column
- Service pressure - 60 psig
- Meter pressure - 5 psig
- Local barometric pressure - 14.69 psi
- Ambient temperature - 65 degree F
- Temperature of gas - 50 degree F
- Gas used - natural - 1000 Btus / cu ft
- Time for one revolution - 34 seconds
- Test dial - 2 cu ft

Answer:

Feedback

Input
= 3600×testdialsec/rev×calorificvalue×PCF×TCF3600×testdialsec/rev×calorificvalue×PCF×TCF
= 3600×234×1000×1.337×1.0193600×234×1000×1.337×1.019

The correct answer is: 288509

Question text

Calculate the number of seconds it takes for the 1 cu ft test dial to make one complete revolution given :

- Meter pressure - 2 psig
- Temperature of gas - 60 degree F
- Ambient temperature - 32 degree F
- Gas used - natural - 1050 Btus / cu ft
- Input of unit - 400 MBH

Answer:

Feedback

Inp stands for input

Input = 3600×testdialsec/rev×calorificvalue×PCF3600×testdialsec/rev×calorificvalue×PCF
#sec/rev = 3600×testdialinp×calorificvalue×PCF3600×testdialinp×calorificvalue×PCF
#sec/rev = 3600×1400000×1050×1.1363600×1400000×1050×1.136

The correct answer is: 10.74

Question text

Calculate the input given the following conditions :

-Meter Pressure = 10"wc.

-Test Dial = 5 Cu. Ft.

-Gas Temperature = 50 F

-Ambient Temperature = 45 F

-Sec. Per Rev. = 45 Seconds

-Propane Gas = 2500 Btu's / Ft3

Answer:

Feedback

Input = 3600×testdialsec/rev×calorificvalue×TCF3600×testdialsec/rev×calorificvalue×TCF
= 3600×545×2500×1.0193600×545×2500×1.019

The correct answer is: 1019000

Meter test dial - 2 cubic feet

Clocked time per revolution - 75 seconds

Gas used - natural gas at 0.293 kW per cubic foot

Meter gas pressure - 15 psig

Correction factor : Answer

Input : Answer

kW

Feedback

Correction factor = (14.73+15) / 14.73

Question text

Meter test dial - 0.15 cubic meters

Clocked time per revolution - 25 seconds

Gas used - 10.35 kW per cubic meter

Meter gas pressure - 35 kPa

Correction Factor : Answer

Input : Answer

kW

Feedback

Correction Factor : 101.325 + 35 / 101.325

Question text

Meter test dial - 2.5 cubic meters

Clocked time per revolution - 25 seconds

Gas used - natural gas at 35310 Btu / cubic meter

Meter has pressure - 20 psig

Correction Factor : Answer

Input : Answer

Btuh

Feedback

14.73 + 20 / 14.73

Question text

Meter test dial - 1 cubic foot

Clocked time per revolution - 35 seconds

Gas used - propane at 2500 Btu per cubic foot

Meter gas pressure - 10 psig

Correction Factor : Answer

Input : Answer

Btuh

Feedback

14.73 + 10 / 14.73

State the length of time it will take for a one cubic foot test dial to make one revolution when clocking the input of a boiler rated at 225000 Btuh fired on CH4.

Answer:

Feedback

T = 3600secH×1×1000Btu/cuft225000BTUH3600secH×1×1000Btu/cuft225000BTUH

The correct answer is: 16

Question **2**

Not answered

Marked out of 6.00

Flag question

Question text

Calculate the input for the appliances below. The heating value is 1000 Btu/ cu ft. The installations are low pressure system at 7 inches water column.

Input for the Appliances

Time per revolution	Test Dial Size	Calculated Input
10 Seconds	1 cubic foot	Answer Btuh
18 Seconds	0.6 cubic foot	Answer Btuh
1 Minute	2 cubic foot	Answer Btuh
24 Seconds	1 cubic foot	Answer Btuh
20 Seconds	0.5 cubic foot	Answer Btuh
40 Seconds	0.2 cubic foot	Answer

Input for the Appliances

Time per revolution	Test Dial Size	Calculated Input
		Btuh

Question **3**
Not answered
Marked out of 1.00

Flag question

Question text

A boiler has a rated input of 43.95 kW/HR. Clock the appliance using the 1 cubic foot test dial which takes 25 seconds for 1 revolution on the low pressure meter use a heating value is 10.35 kW per cubic meter.

- How many cubic meters of fuel are being consumed ?

Answer

cu m per hour

Feedback

3600sed/h25sec/h×1cuft/rev3600sec/h25sec/h×1cuft/rev
= 144 CFH / 35.31 cu ft / cu m

Question text

- How many kW of fuel is this ? Answer kW / H

Feedback

4.078 cu m / H x 10.35 kw / cu m = 42.209 kW / H

The correct answer is: 42.209

Question **5**

Question text

- Is the unit over-fired or under-fired ?

Select one:

a.
Over fired

b.
Under fired

Feedback

Your answer is incorrect.

Under fired but acceptable

The correct answer is: Under fired

Question text

A direct fired make up air heater has an input rating of 210000 Btuh. It has one burner with a 0.05 cubic meter test dial that takes 30 seconds for one revolution. Heating value is 1000 Btu / cubic foot.

- How many cubic feet of fuel are being consumed ?

Answer _____ CFH.

Feedback

3600sec/H30sec/rev×3600sec/H30sec/rev× 0.05 cu m / H

6 cu m / h x 35.31 cu ft / cu m

The correct answer is: 211.86

Question text

- How many Btus of fuel is this ?

Answer _____ BTU H

Feedback

211.86 CFH x 1000 BTU / cu ft

The correct answer is: 211860

Question text

- Is the unit under fired or over fired ?

Select one:

a.
Over fired

b.
Under fired

Feedback

Your answer is incorrect.

The correct answer is: Over fired

Question text

Calculate the input for a furnace given the following information :

- It took 50 seconds for a 2 cubic foot test dial to complete one revolution
- The gas is flowing through the meter at a pressure of 5 psi
- The selling pressure is 7 inch water column (0.25 psi)
- The local atmospheric pressure is 14.7
- The heating value of the fuel gas is 1250 Btu per cubic foot

Answer:

Feedback

3600sec/H50sec/rev3600sec/H50sec/rev x 2 cu ft / rev x 5psig+14.714.735psig+14.714.73 = 192.587 CFH
192.587 CFH x 1250 BTU / cu ft

The correct answer is: 240733

Question text

Calculate the input (kW) for an appliance given the following information :

- It took 38 seconds for a 0.05 cubic meter test dial to complete one revolution
- The gas is flowing through the meter at a pressure of 35 kPa
- The selling pressure is 1.38 kPa
- The local atmospheric pressure is 101.325 kPa
- The heating value of the gas is 10.5 kW / cu meter

Answer:

Feedback

3600sec/H38sec/rev3600sec/H38sec/rev x 0.05 cu m / rev
x 35kPa+101.325101.325kPa35kPa+101.325101.325kPa = 6.373 cu m /

6.373 cu m / h x 10.5 kw/ cu m

The correct answer is: 66.917
Your answer is incorrect.

The correct answer is: An appliance that operates with a non-positive vent static pressure with a flue loss not less than 17%. → Category 1 Appliance, That portion of the combustion air that is supplied for the intermediate and final stages of the combustion process and is supplied downstream from the point of ignition → Secondary Air,
Acceptable to the authority having jurisdiction. → Approved, Air that is admitted to a space containing an appliance to replace air exhausted through a ventilation opening or by means of exfiltration. → Ventilation Air,
The air required for satisfactory combustion of gas including excess air. → Combustion Air, That portion of the combustion air that is supplied to the combustion zone in excess of that which is theoretically required for complete combustion. → Excess Air, That part of a piping or tubing system that conveys gas from the main piping or tubing or header to an appliance or appliances. → Branch Line, That portion of the combustion air that is supplied for the initial stages of the combustion process and is supplied upstream of the point of combustion → Primary Air, The ambient air that is admitted to a venting system at the draft hood, draft diverter, or draft regulator. → Flue Gas Dilution Air, An appliance intended to supply hot liquid or vapor for space heating, processing, or power purposes → Boiler

Your answer is incorrect.

The correct answer is: A primarily vertical shaft that encloses at least one flue for conducting flue gases outdoors → Chimney, A mechanical draft produced by a device upstream from the combustion zone of an appliance → Forced Draft, A burner in which the combustion air is supplied by a mechanical device such as a fan or blower at sufficient pressure to overcome the resistance of the burner and the appliance → Forced-Draft Burner, A burner that is not equipped with a mechanical device for supplying combustion air. → Natural-Draft Burner, A draft control device intended to stabilize the natural draft in an appliance by admitting room air to the venting system. A double-acting draft regulator is one whose balancing damper is free to move in either direction. → Draft Regulator (Barometric Damper),
A factory-fabricated flexible hose assembly and related fittings designed to convey gaseous fuel from a gas supply piping to the gas inlet to an appliance. → Gas Hose, A secondary structure (room) within or attached to a structure (building) in which an appliance(s) is installed. → Enclosure,
Piping or tubing that, when in place in a wall, or ceiling of a finished building, is hidden from view and can only be exposed by use of a tool. It does not apply to piping or tubing that passes directly through a wall or partition. → Concealed Piping or Tubing, A mechanical draft produced by a device downstream from the combustion zone of an appliance → Induced Draft, Constituents resulting from the combustion of gas with oxygen of the air and includes inert gases, but excludes excess air → Combustion Products

The correct answer is:
Means a pilot flame supervised by a primary safety control which senses the presence of the pilot prior to gas being admitted to the main burner. → Proved Pilot, A source of ignition which continues to function during the entire period that the flame is present. → Intermittent Ignition, To replace the existing fluid (gaseous or liquid) in piping, tubing, equipment, a container or an appliance, with a desired fluid. → Purge, A heater which transfers heat from the source to the heated objects without heating the intervening air → Infrared Heater, A flame that is used to ignite a gas/air or propane/air mixture at the main burner or burners. → Pilot,
A source of ignition which ceases to function after the trial-for-ignition period. → Interrupted Ignition,
A pilot which is automatically lighted each time there is a call for heat and which is cut off automatically at the end of the trial-for-ignition of the main burner. → Interrupted Pilot,
A pilot that burns without turn down throughout the entire time the burner is in service, whether the main burner is firing or not. → Continuous Pilot,
A pilot which is automatically lighted each time there is a call for heat and burns during the entire period that the main burner is firing. → Intermittent Pilot, That portion of an appliance designed for the attachment of a draft hood, vent connector, or venting system → Flue Collar

Your answer is incorrect.

The correct answer is: That part of the venting system that conducts the flue gases from the flue collar of an appliance to a chimney or vent, and that may include a draft control device. → Vent Connector, An automatic valve that has a closing time of less than 5 seconds upon being de-energized. → Fast-Closing Valve, A pressure relief valve that is built into the body of the diaphragm assembly of a pressure regulator. → Internal Relief Valve, A valve that automatically shuts off the supply of gas when de-energized by a combustion safety control, safety limit control or loss of activating medium. → Safety Shut-off Valve, A system for the removal of flue gases to the outdoors by means of a chimney, vent connector, vent, or a natural or mechanical exhaust system. → Venting System, The combination of valves, controls, piping and tubing, of an appliance upstream from the manifold, through which gas is supplied to the appliance and by which gas is controlled. → Valve Train,
A device, either adjustable or non-adjustable, for controlling and maintaining, within acceptable limits, a uniform outlet pressure. → Pressure Regulator, A pressure regulator installed on a service line to control the pressure of the gas delivered to the customer. → Service Regulator, A regulator that is capable of maintaining a reduced outlet pressure when the fuel flow condition is static → Lock-up (Positive Shut-off) Regulator

Which Code governs the assembly or construction of an appliance subject to the authority having jurisdiction?

Select one:

a.

CSA B 149.3

b.

CSA B 149.1

c.

CSA B 149.4

d.

CSA B 149.2

Feedback

Your answer is incorrect.

B149.1 (4.2.3)

The correct answer is: CSA B 149.3

Question text

An appliance, accessory, component, equipment or material used in an installation shall be of a type and rating _____for the specific purpose for which it is employed.

Select one:

a.

appropriate

b.

sized

c.

fit

d.

approved

Feedback

Your answer is incorrect.

B149.1 (4.2.1)

The correct answer is: approved

Question text

When a new appliance, certified for high altitude, is installed above 4,500 feet, what is the required input rating reduction?

Select one:

a.

8 % for each additional 1,000 ft. (300 m)

b.

4 % for each additional 1,000 ft. (300 m)

c.

5 % for each additional 1,000 ft. (300 m)

d.

2 % for each additional 1,000 ft. (300 m)

Feedback

Your answer is incorrect.

B149.1 (4.22.1)

The correct answer is: 4 % for each additional 1,000 ft. (300 m)

Question text

An appliance installed in a location where flammable vapor, combustible dust or fibers or an explosive mixture is present shall be:

Select one:

a.

Purged with nitrogen

b.

Sleeved

c.

Certified for installation in a hazardous location

d.

Wrapped in a fire proof coating

Feedback

Your answer is correct.

B.149.1 (4.9.2)

The correct answer is: Certified for installation in a hazardous location

Question text

In a storage garage, an appliance shall be installed so that a component capable of igniting a flammable vapor is located not less than _____ above the floor.

Select one:

a.

16 inches (400 mm)

b.

6 inches (150 mm)

c.

18 inches (450 mm)

d.

12 inches (300 mm)

Feedback

Your answer is correct.

B149.1 (4.16.2)

The correct answer is: 18 inches (450 mm)

Question text

When a conflict exists between the manufacturers' certified installation instructions and the B 149.1 gas code, which method shall be used?

Select one:

a.

home owner

b.

common sense

c.

code

d.

manufacturer

Feedback

Your answer is incorrect.

B149.1 (4.1.4)

The correct answer is: code

Question text

When an appliance is converted from the gas or fuel specified on the rating plate, the conversion shall be in accordance with:

Select one:

a.

The manufacturer's certified instructions

b.

good engineering principles

c.

home owner's request

d.

gas fitter's experience

Feedback

Your answer is correct.

B149.1 (4.5.3)

The correct answer is: The manufacturer’s certified instructions

Question text

Who determines if the installation of a used appliance is acceptable?

Select one:

a.

the gas inspector

b.

the certified installer

c.

the manufacturer

d.

the homeowner

Feedback

Your answer is incorrect.

B149.1 (4.5.6)

The correct answer is: the certified installer

Question text

In a repair garage, an appliance shall be installed so that a component capable of igniting a flammable vapor is located not less than _____ above the floor.

Select one:

a.

18 inches (450 mm)

b.

5 feet (1500 mm)

c.

4.5 ft. (1400 mm)

d.

36 inches (900 mm)

Feedback

Your answer is incorrect.

B149.1 (4.16.3)

The correct answer is: 4.5 ft. (1400 mm)

Question text

When an appliance is installed in an area where physical damage may be incurred, what is required?

Select one:

a.

it shall be protected from such damage

b.

it shall be labeled and identified "Danger, Gas Appliance"

c.

it shall not be installed in such a location

d.

it shall be in a framed mechanical room

Feedback

Your answer is incorrect.

B149.1 (4.23)

The correct answer is: it shall be protected from such damage

Question text

What shall be done to an appliance that has been converted from propane to natural gas?

a.

Purge the system with oxygen

b.

Adjust the input

c.

Mark the appliance rating plate with the change has been made

d.

Attach a tag on the gas meter

Feedback

Your answer is correct.

4.5

The correct answer is:

Mark the appliance rating plate with the change has been made

Question text

During the installation of a meter or a service regulator, the installer shall comply with which code?

a.

CSA Z.240

b.

CSA Z.7396

c.

CSA Z.662

d.

CSA Z.682

Feedback

Your answer is incorrect.

4.6

The correct answer is:

CSA Z.662

Question text

Which type of flashlight shall be used to check for gas leakage?

a.

Class 1 group B

b.

Class 1 group A

c.

Class 2 group A

d.

Class 2 group B

Feedback

Your answer is incorrect.

4.12

The correct answer is: Class 1 group A

Question text

Which type of protection is required to provide protection from a combustible material when the required clearance without protection is 34-inches, and the appliance is being installed in a location with only 21-inches on the side and back wall clearance from combustible material?

a.

28 Gauge Sheet Metal

b.

¼” Insulating Mill Board

c.

¼” Insulating Mill Board with Mineral Wool Batts

d.

22 Gauge Sheet Metal

Feedback

Your answer is incorrect.

Table 4.1

The correct answer is:

22 Gauge Sheet Metal

Question text

An access opening shall be provided to a space where an appliance is installed, and the opening shall be a minimum of:

a.

24" x 30"

b.

36" x 36"

c.

24" x 24"

d.

24" x 36"

Feedback

Your answer is incorrect.

4.14

The correct answer is:

24" x 30"

Question text

Where an appliance is installed on a roof, the clearance between the edge of the roof shall be:

a.

5'

b.

8'

c.

4'

d.

6'

Feedback

Your answer is incorrect.

4.14

The correct answer is:

6'

Question text

An appliance with an FVIR system installed in a storage garage shall have a minimum clearance above the floor of:

a.

4.5'

b.

No Clearance Required

c.

3'

d.

1.5'

Feedback

Your answer is incorrect.

4.16

The correct answer is:

No Clearance Required

Question text

What input shall an appliance certified for high-altitude installation be adjusted to, if the sea level rating is 120,000 BTUH and a high-altitude rating of 98,000 BTUH when installed at an elevation of 8,200 feet above sea level?

a.

72,675 BTUH

b.

79,398 BTUH

c.

86,204 BTUH

d.

82,320 BTUH

Feedback

Your answer is incorrect.

4.22

The correct answer is:

82,320 BTUH

Question text

What is the maximum vapor pressure supplied into the piping or tubing system serving an appliance in a mobile home?

a.

10” w.c.

b.

11” w.c.

c.

7” w.c.

d.

13” w.c.

Feedback

Your answer is incorrect.

4.25

The correct answer is:

13” w.c.

Question text

A defective heat exchanger in a furnace installed in a dwelling unit shall be:

a.

Temporarily repaired

b.

Replaced

c.

Repaired

d.

Re-Calibrated

Feedback

Your answer is incorrect.

4.21

The correct answer is:

Replaced

Question text

Who shall ensure that the gas piping or tubing system is gas-tight at the completion of the test?

a.

Safety Officer

b.

Gas Contactor

c.

Installer

d.

Field Safety Representative

Feedback

Your answer is incorrect.

4.3

The correct answer is:

Installer

Question text

For the purpose of the B.149.1 which of the following gases does the code book not apply to?

a.

C4H10

b.

C2H2

c.

CH4

d.

C3H8

Feedback

Your answer is incorrect.

4.1

The correct answer is:

C2H2

Question text

Unless a greater distance is indicated on the appliance rating plate, what is the minimum service clearance to any side, top, or bottom where service could be necessary?

a.

30"

b.

24"

c.

36"

d.

48"

Feedback

Your answer is incorrect.

4.14

The correct answer is:

24"

Question text

What type of gas valve shall be used for an automatic fire-extinguishing system protecting an exhaust system to ensure the gas supply to the appliance and the pilot is automatically shut off?

a.

Automatic Electrically Operated Fast-Closing

b.

Automatic Seismic Valve

c.

Redundant Gas Valve

d.

Mechanical Electrical Fast-Closing Valve

Feedback

Your answer is incorrect.

4.19

The correct answer is:

Automatic Electrically Operated Fast-Closing

Which of the following piping materials may not be used to run gas above ground.

Select one:

a.

Steel

b.

Plastic

c.

Copper

d.

CSST

Feedback

Your answer is incorrect.

B149.1 (6.2.17)

The correct answer is: Plastic

Question **2**
Not answered

Marked out of 1.00

Flag question

Question text
The maximum gas (natural and propane) pressure allowance for threaded schedule 40 steel pipe is _____(_____).

Select one:

a.

Less than 250 (1725 kPa)

b.

125 (860 kPa)

c.

no limit on steel pipe

d.

350 (2400 Kpa)

Feedback
Your answer is incorrect.

B149.1 (6.2.3)

The correct answer is: 125 (860 kPa)

Question **3**
Not answered

Marked out of 1.00

Flag question

Question text

The maximum allowable pressure drop on a low pressure system shall not exceed:

Select one:

a.

.5 inch w.c. (125 Pa)

b.

1.5 inch w.c. (375 Pa)

c.

1 inch w.c. (250 Pa)

d.

2 inch w.c. (500Pa)

Feedback

Your answer is incorrect.

B149.1 Table 6.1

The correct answer is: 1 inch w.c. (250 Pa)

Question **4**

Not answered

Marked out of 1.00

Flag question

Question text

Which of the following fittings are not included on tables A.16 and B.11 ?

Select one:

a.

tees

b.

couplings

c.

90's

d.

45's

Feedback

Your answer is incorrect.

B149.1 Tables A.16 and B.11

The correct answer is: couplings

Question **5**

Not answered

Marked out of 1.00

Flag question

Question text

What is the minimum size piping allowed to be installed in a concealed location?

Select one:

a.

0.5 inch NPS

b.

1.0 inch (NPS)

c.

0.75 inch (NPS)

d.

0.25 inch NPS

Feedback

Your answer is incorrect.

B149.1 (6.3.9)

The correct answer is: 0.5 inch NPS

Question **6**

Not answered

Marked out of 1.00

Flag question

Question text

What is the maximum spacing between supports for a horizontal 1 inch steel gas line?

Select one:

a.

6 feet (2m)

b.

10 feet (3m)

c.

15 feet (5m)

d.

8 feet (2.5m)

Feedback

Your answer is incorrect.

B149.1 (Table 6.2)

The correct answer is: 8 feet (2.5m)

Question **7**

Not answered

Marked out of 1.00

Flag question

Question text

What type of joints are ***not*** permitted in steel piping?

Select one:

a.

threaded

b.

press-connected

c.

brazed

d.

flanged

Feedback

Your answer is incorrect.

B149.1 (6.9.1)

The correct answer is: brazed

Question **8**

Not answered

Marked out of 1.00

Flag question

Question text

What is the maximum size gas piping that may be threaded?

Select one:

a.

2.5 inches

b.

1.5 inches

c.

2.0 inches

d.

1.25 inches

Feedback

Your answer is incorrect.

B149.1 (6.9.2)

The correct answer is: 2.0 inches

Question **9**

Not answered

Marked out of 1.00

Flag question

Question text

Which of the following statements is ***not*** true with regards to jointing sealant?

Select one:

a.

applied to male threads only

b.

tape must be pink

c.

first two starter threads must be left bare

d.

certified

Feedback

Your answer is incorrect.

B149.1 (6.9.6)

The correct answer is: tape must be pink

Question **10**

Not answered

Marked out of 1.00

Flag question

Question text

Which of the following is ***not*** an approved joint for copper gas piping?

Select one:

a.

press-connect

b.

flared

c.

brazed

d.

soldered

Feedback

Your answer is incorrect.

B149.1 (6.9.9)

The correct answer is: soldered

Question **11**

Not answered

Marked out of 1.00

Flag question

Question text

What is the minimum diameter of an underground gas line?

Select one:

a.

1/2 inch

b.

3/4 inch

c.

1 inch

d.

1 1/4 inches

Feedback

Your answer is incorrect.

B149.1 (6.15.1)

The correct answer is: 1/2 inch

Question **12**

Not answered

Marked out of 1.00

Flag question

Question text

What is the maximum length for a hose connection in a permanent installation?

Select one:

a.

10 feet (3 m)

b.

15 feet (4.6 m)

c.

no maximum

d.

30 feet (9.5 m)

Feedback

Your answer is incorrect.

B149.1 [6.20.3(a)]

The correct answer is: 10 feet (3 m)

Question **13**

Not answered

Marked out of 1.00

Flag question

Question text

What is the minimum diameter of test gauge that may be used in a pressure test on gas piping?

Select one:

a.

2 inches (50 mm)

b.

1.5 inches (38 mm)

c.

3 inches (75 mm)

d.

2.5 inches (63 mm)

Feedback

Your answer is incorrect.

B149.1 [6.22.2(b)]

The correct answer is: 3 inches (75 mm)

Question **14**
Not answered

Marked out of 1.00

Flag question

Question text
What is the required test pressure and duration for a 250 foot / 2 psi gas system?

Select one:

a.

50 psi / 60 min

b.

15 psi / 15 min

c.

50 psi / 180 min

d.

15 psi / 60 min

Feedback
Your answer is incorrect.

B149.1 (Table 6.3)

The correct answer is: 15 psi / 60 min

Question **15**
Not answered

Marked out of 1.00

Flag question

Question text

What is the maximum operating pressure for a "container supplied" propane system?

Select one:

a.

375 psi

b.

250 psi

c.

test on propane "container supplied" systems not required

d.

350 psi

Feedback

Your answer is incorrect.

B149.1 [Table 6.3 (footnote a)]

The correct answer is: 250 psi

Question **16**

Not answered

Marked out of 1.00

Flag question

Question text

Which of the following must accompany an underground plastic gas piping installation?

Select one:

a.

below ground tracing wire

b.

below ground shut-off valve / above ground tracing wire

c.

above ground shut-off valve / below ground tracing wire

d.

above ground shut-off valve

Feedback

Your answer is incorrect.

B149.1 (6.15.13 /14)

The correct answer is: above ground shut-off valve / below ground tracing wire

Question **17**

Not answered

Marked out of 1.00

Flag question

Question text

How should piping/tubing laid underground be protected against corrosion?

Select one:

a.

waterproof paint

b.

good engineering practice or manufacturer's instructions

c.

teflon coating

d.

electrical tape

Feedback

Your answer is incorrect.

B149.1 (6.16.2)

The correct answer is: good engineering practice or manufacturer's instructions

Question **18**

Not answered

Marked out of 1.00

Flag question

Question text

Which of the following is ***not*** an acceptable shut-off for a high pressure gas system?

Select one:

a.

gate valve

b.

ball valve

c.

lubricated plug valve

d.

eccentric valve

Feedback

Your answer is incorrect.

B149.1 (6.18.4)

The correct answer is: gate valve

Question **19**

Not answered

Marked out of 1.00

Flag question

Question text

Which of the following is not a requirement for plastic tubing terminating above ground ?

Select one:

a.

Plastic piping not subject to external stress

b.

Casing extends at least 6 inches below grade

c.

Above ground portion is completely encased

d.

Exposed piping painted yellow to a height of 18 inches

Feedback

Your answer is incorrect.

B149.1 (6.2.19)

The correct answer is: Exposed piping painted yellow to a height of 18 inches

Question **20**

Not answered

Marked out of 1.00

Flag question

Question text

What is the maximum distance from the gas meter or line pressure regulator extension to existing system may be added without changing existing sizing ?

Select one:

a.

36 inches

b.

12 inches

c.

48 inches

d.

24 inches

Feedback

Your answer is incorrect.

B149.9 (6.6.2)

The correct answer is: 24 inches

Question **21**

Not answered

Marked out of 1.00

Flag question

Question text

Which of the following is a permissible location for gas piping ?

Select one:

a.

Heating duct

b.

Elevator shaft

c.

False ceiling space (T.bar ceiling)

d.

Chimney

Feedback

Your answer is incorrect.

B149.1 6.7.2 , 6.7.6

The correct answer is: False ceiling space (T.bar ceiling)

Question **22**

Not answered

Marked out of 1.00

Flag question

Question text

Which of the following is a permitted practice ?

Select one:

a.

1/2 inch welded joint

b.

Using gas piping as an electrical ground

c.

Repairing a defective section of piping / tubing

d.

Use of a close nipple

Feedback

Your answer is incorrect.

B149.1 (6.14 , 6.9.2)

The correct answer is: 1/2 inch welded joint

Question **23**

Not answered

Marked out of 1.00

Flag question

Question text

How far must the unthreaded portion of a pipe nipple extend through a finished floor ?

Select one:

a.

2 inches

b.

1/2 inch

c.

1 1/2 inch

d.

1 inch

Feedback

Your answer is incorrect.

B149.1 (6.12.2)

The correct answer is: 2 inches

Question **24**

Not answered

Marked out of 1.00

Flag question

Question text

Which of the following appliances does not require a dirt pocket ?

Select one:

a.

Furnace

b.

water heater

c.

Clothes dryer

d.

Boiler

Feedback

Your answer is incorrect.

B149.1 (6.13.1)

The correct answer is: Clothes dryer

Question **25**

Not answered

Marked out of 1.00

Flag question

Question text

What is the minimum length of a drip / dirt pocket ?

Select one:

a.

Equal to diameter of pipe it serves

b.

6 inches

c.

Equal to its length

d.

3 inches or diameter of pipe it serves , whichever is greater

Feedback

Your answer is incorrect.

B149.1 (6.13.2)

The correct answer is: 3 inches or diameter of pipe it serves , whichever is greater

Question **26**

Not answered

Marked out of 1.00

Flag question

Question text

What is the minimum depth of underground gas piping below a commercial drive way / parking lot ?

Select one:

a.

24 inch

b.

15 inch

c.

36 inch

d.

30 inch

Feedback

Your answer is incorrect.

B149.1 (6.15.4)

The correct answer is: 24 inch

Question **27**

Not answered

Marked out of 1.00

Flag question

Question text

For identification of a gas *piping system* in a residential application. The maximum spacing of intervals along the entire length of the gas pipe shall not exceed:

Select one:

a.

Must be completely yellow in a residential building

b.

Identification not required

c.

20 feet

d.

6 Feet

Feedback

Your answer is incorrect.

B149.1 (6.17.3)

The correct answer is: Identification not required

Question **28**

Not answered

Marked out of 1.00

Flag question

Question text

Where is / are the shut off valves located when a gas line is connected between two buildings ?

Select one:

a.

At point of exit / entry of either building

b.

At point of exit / entry of building with largest gas input

c.

At the point of exit of the first building and point of entry of the second

d.

At the point of exit / entry of the system with largest diameter piping

Feedback

Your answer is incorrect.

B149.1 (6.18.8)

The correct answer is: At the point of exit of the first building and point of entry of the second

Question **29**

Not answered

Marked out of 1.00

Flag question

Question text

How long must a test be maintained once the appliance is installed ?

Select one:

a.

10 minutes

b.

1 hour

c.

30 minutes

d.

45 minutes

Feedback

Your answer is incorrect.

B149.1 (6.22.3 (d)

The correct answer is: 10 minutes

Question **30**

Not answered

Marked out of 1.00

Flag question

Question text

Which of the following is acceptable support for horizontal rooftop gas piping / tubing ?

Select one:

a.

Unpainted steel riser champs

b.

Support not required on rooftops

c.

Treated wooden blocks

d.

Untreated wooden blocks

Feedback

Your answer is incorrect.

B149.1 (6.25.1)

The correct answer is: Treated wooden blocks

Question **31**

Not answered

Marked out of 1.00

Flag question

Question text

What types of fittings are required with steel pipe?

Select one:

a.

Malleable iron or stainless steel and shall comply with ANSI/ASME B16.3

b.

Ductile iron complying with CSA B64.10

c.

Malleable iron or steel and shall comply with ANSI/ASME B16.3

d.

Duriron and complying with AWWA B.149.5

Feedback

Your answer is incorrect.

6.2.2

The correct answer is: Malleable iron or steel and shall comply with ANSI/ASME B16.3

Question **32**

Not answered

Marked out of 1.00

Flag question

Question text

What is acceptable termination to a gas line outlet not yet connected to an appliance ?

Select one:

a.

Ball valve

b.

Plug valve

c.

Cap, plug or plugged valve

d.

Nothing as long as gas is off

Feedback

Your answer is incorrect.

B149.1 (6.12.1)

The correct answer is: Cap, plug or plugged valve

Question **33**

Not answered

Marked out of 1.00

Flag question

Question text

What is the minimum distance from the surface of a wall that contains a gas line before protection is not required ?

Select one:

a.

1.25 inches

b.

1.5 inches

c.

1.75 inches

d.

2 inches

Feedback

Your answer is incorrect.

B149.1 (6.16.4)

The correct answer is: 1.75 inches

Question **34**

Not answered

Marked out of 1.00

Flag question

Question text

What does CSST stand for ?

Select one:

a.

Computerized Structural Steel Tupperware

b.

Bradbury Steel Tubing

c.

Corrugated Stainless Steel Tubing

d.

Coated Stainless steel tubing

e.

Certified standard stainless tubing

Feedback

Your answer is incorrect.

B149.1 (6.2.8)

The correct answer is: Corrugated Stainless Steel Tubing

Question **35**

Not answered

Marked out of 1.00

Flag question

Question text

What type of copper is approved for gas ?

Select one:

a.

Type G , L or K

b.

Type K

c.

Type L or K

d.

Type G

Feedback

Your answer is incorrect.

B149.1 (6.2.4)

The correct answer is: Type G , L or K

Question **36**

Not answered

Marked out of 1.00

Flag question

Question text

What type of copper pipe is approved for underground gas installation ?

Select one:

a.

Any type as long as it's painted

b.

Type K

c.

Type K and externally coated L or G

d.

Externally coated Type G

Feedback

Your answer is incorrect.

B149.1 (6.2.8.)

The correct answer is: Type K and externally coated L or G

Question **37**

Not answered

Marked out of 1.00

Flag question

Question text

What is the minimum size piping that may be concealed ?

Select one:

a.

NPS 1/2 inch

b.

NPS 3/4 inch

c.

NPS 3/8 inch

d.

NPS 1/4 inch

Feedback

Your answer is incorrect.

B149.1 (6.3.9)

The correct answer is: NPS 1/2 inch

Question text

Which of the following is an acceptable fitting for a gas system ?

Select one:

a.

1 inch x 3/4 inch steel bushing

b.

1 inch street 90

c.

1 inch x 3/4 inch malleable bushing

d.

3/4 inch close nipple

Feedback

Your answer is incorrect.

B149.1

The correct answer is: 1 inch x 3/4 inch steel bushing

A red tag on a gas appliance indicates that the appliance must be _____ before it is put back into service.

Select one:

a.

Repaired or replaced

b.

Converted to a different fuel

c.

Relocated

d.

Re-certified

Feedback

Your answer is correct.

The correct answer is: Repaired or replaced

Question **2**

Correct

Mark 1.00 out of 1.00

Flag question

Question text

A gas meter may be relocated by

Select one:

a.

A class A gas fitter

b.

A class B gas fitter

c.

A class C gas fitter

d.

An authorized gas company employee

e.

A certified gas contractor

Feedback

Your answer is correct.

The correct answer is: An authorized gas company employee

Question **3**

Correct

Mark 1.00 out of 1.00

Flag question

Question text

A class B gas fitters license issued after April 1, 2009 shall entitle the holder while employed by a gas contractor to install or alter.

Select one:

a.

A class C gas fitter

b.

A gas system consisting of atmospherically-fired units fitted with approved draft control; devices with no limitations on the total input of the applainces

c.

A gas system consisting of atmospherically-fired units fitted with approved draft control devices with a limitation of 750000 Btuh on the total input of the appliances

d.

A gas system with an appliance input of 400000 Btuh or less

e.

Any gas system

Feedback

Your answer is correct.

The correct answer is: A gas system with an appliance input of 400000 Btuh or less

Question **4**

Correct

Mark 1.00 out of 1.00

Flag question

Question text

An applicant for a class A gas fitters license shall have held a class B gas fitters license for a minimum of

Select one:

a.

3 years

b.

2 years

c.

1 year

d.

6 months

Feedback

Your answer is correct.

The correct answer is: 2 years

Question **5**

Correct

Mark 1.00 out of 1.00

Flag question

Question text

A gas fitters license may be renewed without re-examination unless it has been expired for :

Select one:

a.

More than 3 years

b.

More than 2 years

c.

More than 1 year

d.

Less than 3 years

e.

More than 5 years

Feedback

Your answer is correct.

The correct answer is: More than 3 years

Question **6**

Correct

Mark 1.00 out of 1.00

Flag question

Question text

The gas fitter responsibility starts at

Select one:

a.

The discharge side of the gas meter

b.

The inlet side of the gas meter

c.

The discharge side of the system regulator

d.

The inlet side of the system regulator

e.

The discharge side of the appliance regulator

Feedback

Your answer is correct.

The correct answer is: The discharge side of the gas meter

Question **7**

Correct

Mark 1.00 out of 1.00

Flag question

Question text

A _____ may apply for a gas permit

Select one:

a.

Homeowner

b.

Class B gas fitter

c.

Renter

d.

Class A gas fitter

Feedback

Your answer is correct.

The correct answer is: Homeowner

Question **8**

Correct

Mark 1.00 out of 1.00

Flag question

Question text

A **Notification of Completion , Installation or Alteration** form shall be submitted :

Select one:

a.

Before the end of the fiscal year

b.

Before any work authorized by a permit is started

c.

Upon completion of the work authorized by a permit

d.

After each phase of the work authorized by a permit

Feedback

Your answer is correct.

The correct answer is: Upon completion of the work authorized by a permit

Question **9**

Correct

Mark 1.00 out of 1.00

Flag question

Question text

The owner of a single-family dwelling who lives or intends to live in that dwelling , may do the work of a gas fitter in that dwelling provided that :

Select one:

a.

All of the statements are correct

b.

No person is being paid to do or assist the owner in doing the work

c.

There is no other dwelling or premise that is directly attached to the single-family dwelling

d.

No part of the dwelling is rented or intended to be rented to any person

Feedback

Your answer is correct.

The correct answer is: All of the statements are correct

A red tag on a gas appliance indicates that the appliance must be _____ before it is put back into service.

Select one:

a.

Repaired or replaced

b.

Converted to a different fuel

c.

Relocated

d.

Re-certified

Feedback
Your answer is correct.

The correct answer is: Repaired or replaced

Question **2**
Correct

Mark 1.00 out of 1.00

Flag question

Question text
A gas meter may be relocated by

Select one:

a.

A class A gas fitter

b.

A class B gas fitter

c.

A class C gas fitter

d.

An authorized gas company employee

e.

A certified gas contractor

Feedback
Your answer is correct.

The correct answer is: An authorized gas company employee

Question **3**
Correct

Mark 1.00 out of 1.00

Flag question

Question text
A class B gas fitters license issued after April 1, 2009 shall entitle the holder while employed by a gas contractor to install or alter.

Select one:

a.

A class C gas fitter

b.

A gas system consisting of atmospherically-fired units fitted with approved draft control; devices with no limitations on the total input of the applainces

c.

A gas system consisting of atmospherically-fired units fitted with approved draft control devices with a limitation of 750000 Btuh on the total input of the appliances

d.

A gas system with an appliance input of 400000 Btuh or less

e.

Any gas system

Feedback
Your answer is correct.

The correct answer is: A gas system with an appliance input of 400000 Btuh or less

Question **4**
Correct

Mark 1.00 out of 1.00

Flag question

Question text

An applicant for a class A gas fitters license shall have held a class B gas fitters license for a minimum of

Select one:

a.

3 years

b.

2 years

c.

1 year

d.

6 months

Feedback

Your answer is correct.

The correct answer is: 2 years

Question **5**
Correct

Mark 1.00 out of 1.00

Flag question

Question text

A gas fitters license may be renewed without re-examination unless it has been expired for :

Select one:

a.

More than 3 years

b.

More than 2 years

c.

More than 1 year

d.

Less than 3 years

e.

More than 5 years

Feedback

Your answer is correct.

The correct answer is: More than 3 years

Question **6**

Correct

Mark 1.00 out of 1.00

Flag question

Question text

The gas fitter responsibility starts at

Select one:

a.

The discharge side of the gas meter

b.

The inlet side of the gas meter

c.

The discharge side of the system regulator

d.

The inlet side of the system regulator

e.

The discharge side of the appliance regulator

Feedback

Your answer is correct.

The correct answer is: The discharge side of the gas meter

Question **7**

Correct

Mark 1.00 out of 1.00

Flag question

Question text

A _____ may apply for a gas permit

Select one:

a.

Homeowner

b.

Class B gas fitter

c.

Renter

d.

Class A gas fitter

Feedback

Your answer is correct.

The correct answer is: Homeowner

Question **8**

Correct

Mark 1.00 out of 1.00

Flag question

Question text

A **Notification of Completion , Installation or Alteration** form shall be submitted :

Select one:

a.

Before the end of the fiscal year

b.

Before any work authorized by a permit is started

c.

Upon completion of the work authorized by a permit

d.

After each phase of the work authorized by a permit

Feedback

Your answer is correct.

The correct answer is: Upon completion of the work authorized by a permit

Question **9**

Correct

Mark 1.00 out of 1.00

Flag question

Question text

The owner of a single-family dwelling who lives or intends to live in that dwelling , may do the work of a gas fitter in that dwelling provided that :

Select one:

a.

All of the statements are correct

b.

No person is being paid to do or assist the owner in doing the work

c.

There is no other dwelling or premise that is directly attached to the single-family dwelling

d.

No part of the dwelling is rented or intended to be rented to any person

Feedback

Your answer is correct.

The correct answer is: All of the statements are correct

What is the minimum clearance from a combustible material for a moisture-exhaust duct installed in a hospital?

a.
1 inch

b.
9 inches

c.
6 inches

d.
3 inches

Feedback

Your answer is incorrect.

(7.4.7)

The correct answer is:
6 inches

Question **2**
Correct
Mark 1.0 out of 1.0

Flag question

Question text

According to the B.149.1 a forced-air furnace shall be equipped with a high-temperature limit control set at a maximum temperature of:

a.
200 F

b.
250 F

c.
350 F

d.
300 F

Feedback

Your answer is correct.

(7.8.6)

The correct answer is:
250 F

Question **3**
Correct
Mark 1.0 out of 1.0

Flag question

Question text

A direct-fired door heater shall be interlocked with an associated door so the heater can operate only if the door served is open at least:

a.
60%

b.
50%

c.
70%

d.
80%

Feedback

Your answer is correct.

(7.19.2)

The correct answer is:
80%

Question **4**
Incorrect
Mark 0.0 out of 1.0

Flag question

Question text

Which of the following is not a requirement when installing an appliance in a bedroom?

a.
The appliance must be equipped with a pressure regulator

b.
The appliance must be of the automatic temperature-controlled type

c.
The appliance must be vented and meet the requirements for combustion air specified by section 8

d.
The appliance must have a 100% safety shut-off control

Feedback

Your answer is incorrect.

(G&SR 7.25A.3)

The correct answer is:
The appliance must be vented and meet the requirements for combustion air specified by section 8

Question **5**
Correct
Mark 1.0 out of 1.0

Flag question

Question text

A furnace that is used to heat a residence under construction shall be installed on a finished concrete floor or on a poured concrete slab that is at least:

a.
4-inch thick

b.
1-inch thick

c.
6-inch thick

d.
3-inch thick

Feedback

Your answer is correct.

(7.13.5)

The correct answer is:
4-inch thick

Question **6**
Correct
Mark 1.0 out of 1.0

Flag question

Question text

Where any combustible gas, vapor, or dust is present the outdoor intake for a DFMA shall not be less what horizontal distance from the vertical plane:

a.
15 feet

b.
20 feet

c.
5 feet

d.
10 feet

Feedback

Your answer is correct.

(7.20.9)

The correct answer is:
20 feet

Question **7**
Incorrect
Mark 0.0 out of 1.0

Flag question

Question text

In a spray booth application, an interlock shall be provided to lock out the spraying equipment unless the DFPAH is operated in:

a.
Process mode

b.
Ventilation mode

c.
Exhaust mode

d.
Spray mode

Feedback

Your answer is incorrect.

(7.21.10)

The correct answer is:
Ventilation mode

Question **8**
Correct
Mark 1.0 out of 1.0

Flag question

Question text

A refrigerator installed in a dwelling unit shall be of the:

a.
Indoor-non-Direct Vent Type

b.
Direct-Vent Type

c.
Direct-fired Type

d.
Indirect Vent Type

Feedback

Your answer is correct.

(7.34.2)

The correct answer is:
Direct-Vent Type

Question **9**
Correct
Mark 1.0 out of 1.0

Flag question

Question text

When installing a commercial cooking appliance on an unprotected combustible material, the appliance shall have legs that provide a minimum clearance between the metal base and the material of:

a.
8-inch

b.
6-inch

c.
2-inch

d.
4-inch

Feedback

Your answer is correct.

(7.32.2)

The correct answer is:
4-inch

Question **10**
Correct
Mark 1.0 out of 1.0

Flag question

Question text

When a unit heater is installed in a garage, what is the minimum clearance that shall be maintained between the base of the unit heater and the garage floor?

a.
8 feet

b.
6 feet

c.
10 feet

d.
4 feet

Feedback

Your answer is correct.

(7.28.3)

The correct answer is:
8 feet

Question **11**
Incorrect
Mark 0.0 out of 1.0

Flag question

Question text

When installing an incinerator that requires draft-control the incinerator shall be installed with what type of drat-control device?

a.
Double-acting Barometric Damper

b.
Draft Hood

c.
Draft Divertor

d.
Single-acting Barometric Damper

Feedback

Your answer is incorrect.

(7.30.3)

The correct answer is:
Single-acting Barometric Damper

Question **12**
Correct
Mark 1.0 out of 1.0

Flag question

Question text

The discharge pipe for a temperature and pressure relief on a tank-type water heater or the pressure relief device for a tankless water heater shall have the discharge pipe terminate not less than _____ above the floor.

a.
150 mm

b.
6 mm

c.
12 mm

d.
300 mm

Feedback

Your answer is correct.

(7.27.2)

The correct answer is:
300 mm

Question **13**
Incorrect
Mark 0.0 out of 1.0

Flag question

Question text

Except for underfired storage-type water heaters, what is the minimum clearance from a combustible material for any other type of water heater?

a.
2-inch

b.
6-inch

c.
12-inch

d.
4-inch

Feedback

Your answer is incorrect.

(7.27.4)

The correct answer is:
6-inch

Question **14**
Correct
Mark 1.0 out of 1.0

Flag question

Question text

What is the minimum distance from a property line when installing a outdoor pool heater?

a.
48-inch

b.
18-inch

c.
30-inch

d.
24-inch

Feedback

Your answer is correct.

(7.26.3)

The correct answer is:
18-inch

Question **15**
Correct
Mark 1.0 out of 1.0

Flag question

Question text

What is the minimum clearance from the floor to an infrared heater when installed in a repair or shop area that communicates with an aircraft hangar?

a.
10 feet

b.

8 feet

c.
6 feet

d.
4 feet

Feedback

Your answer is correct.

(7.23.5)

The correct answer is:
8 feet

Identify the sub-atomic particles found in an atom? Select all that apply.

Select one or more:

a.
Electron

b.
Neutron

c.
Nucleus

d.
Proton

e.
Core

Feedback

Your answer is partially correct.

You have correctly selected 2.
The correct answers are: Proton, Neutron, Electron

Question **2**
Incorrect
Mark 0.00 out of 1.00

Flag question

Question text

What are factors of the state of matter?

Select one:

a.
Size and density

b.
Volume and mass

c.
Pressure and temperature

d.
Color and weight

Feedback

Your answer is incorrect.

The correct answer is: Pressure and temperature

Question **3**
Incorrect
Mark 0.00 out of 1.00

Flag question

Question text

What causes an atom to have a positive charge?

Select one:

a.
Electron surplus

b.
Electron deficient

c.
Neutron deficient

d.
Nucleus surplus

Feedback

Your answer is incorrect.

The correct answer is: Electron deficient

Question **4**
Incorrect
Mark 0.00 out of 1.00

Flag question

Question text

What holds the electron in its orbit?

Select one:

a.
The law of repelling

b.
The law of attraction

c.
Total force

d.
Centrifugal force

Feedback

Your answer is incorrect.

The correct answer is: The law of attraction

Question **5**
Incorrect
Mark 0.00 out of 1.00

Flag question

Question text

What must occur for an atom to become negatively charged?

Select one:

a.
Neutron deficient

b.
Proton surplus

c.
Electron surplus

d.
Electron deficient

Feedback

Your answer is incorrect.

The correct answer is: Electron surplus

Question **6**
Correct
Mark 1.00 out of 1.00

Flag question

Question text

What is the name given to an atom with an unbalanced electrical charge?

Select one:

a.
Solid

b.
Ion

c.
Element

d.
Compound

Feedback

Your answer is correct.

The correct answer is: Ion

Question **7**
Incorrect
Mark 0.00 out of 1.00

Flag question

Question text

What is a characteristic of a conductor relative to its electrons?

Select one:

a.
Positively charged

b.
Held loosely in their orbits

c.
Held tightly in their orbits

d.
Neutral charged

Feedback

Your answer is incorrect.

The correct answer is: Held loosely in their orbits

Question **8**
Correct
Mark 1.00 out of 1.00

Flag question

Question text

Identify the materials which are considered good conductors. Select all that apply.

Select one or more:

a.
Plastic

b.
Aluminum

c.
Silver

d.
Glass

Feedback

Your answer is correct.

The correct answers are: Silver, Aluminum

Question **9**
Correct
Mark 1.00 out of 1.00

Flag question

Question text

What is created when a large amount of electrons are moving through a small conductor?

Select one:

a.
Low resistance

b.
Voltage

c.
Heat

d.
Low vacuum pressure

Feedback

Your answer is correct.

The correct answer is: Heat

Question **10**
Correct
Mark 1.00 out of 1.00

Flag question

Question text

How are conductors sized?

Select one:

a.
Weight

b.
Diameter

c.
Density

d.
Cross sectional area

Feedback

Your answer is correct.

The correct answer is: Cross sectional area

Question **11**
Correct
Mark 1.00 out of 1.00

Flag question

Question text

Which unit of measure is used to describe “Electromotive Force”?

Select one:

a.
Voltage

b.
Ampere

c.
Ohms

d.
Watts

Feedback

Your answer is correct.

The correct answer is: Voltage

Question **12**
Correct
Mark 1.00 out of 1.00

Flag question

Question text

What does “I” indicate in Ohm’s Law?

Select one:

a.
Resistance

b.
Current

c.
Voltage

d.
Conductance

Feedback

Your answer is correct.

The correct answer is: Current

Question **13**
Correct
Mark 1.00 out of 1.00

Flag question

Question text

_____ is the potential pressure difference between two points in an electrical circuit.

Select one:

a.
Current

b.
Resistance

c.
Voltage

d.
Wattage

Feedback

Your answer is correct.

The correct answer is: Voltage

Question **14**
Correct
Mark 1.00 out of 1.00

Flag question

Question text

What is used to measure the amount of current that flows through a conductor ?

Select one:

a.
Amperes

b.
Volts

c.
Watts

d.
Ohms

Feedback

Your answer is correct.

The correct answer is: Amperes

Question **15**
Incorrect
Mark 0.00 out of 1.00

Flag question

Question text

Calculate the current through a circuit if it has 50 ohms of resistance and the voltage is 24 volts?

Select one:

a.
0.48 Ω

b.

2.08 Ω

c.
2.08 A

d.
0.48 A

Feedback

Your answer is incorrect.

The correct answer is: 0.48 A

Question **16**
Correct
Mark 1.00 out of 1.00

Flag question

Question text

Calculate the voltage of a circuit if it has 15 ohms of resistance and the current flow is 8 amps?

Select one:

a.
120

b.
7

c.
1.875

d.
225

Feedback

Your answer is correct.

The correct answer is: 120

Question **17**
Correct
Mark 1.00 out of 1.00

Flag question

Question text

What would be the anticipated resistance of a circuit with an EMF of 120 volts and a current of 6 amps?

Select one:

a.
0.05 Ω

b.
2 Ω

c.
20 Ω

d.
0.5 Ω

Feedback

Your answer is correct.

The correct answer is: 20 Ω

Question **18**
Correct
Mark 1.00 out of 1.00

Flag question

Question text

Which of the following materials has the highest resistance to current flow?

Select one:

a.
Aluminum

b.

Copper

c.
Glass

d.
Salt Water

Feedback

Your answer is correct.

The correct answer is: Glass

Question **19**
Incorrect
Mark 0.00 out of 1.00

Flag question

Question text

What wire gauge can handle the most current?

Select one:

a.
8

b.
10

c.
12

d.
14

Feedback

Your answer is incorrect.

The correct answer is: 8

At what speed does the electron move?

Select one:

a.
25 feet (7.62 meters) per second

b.
186,000 miles (299,792 kilometers) per hour

c.
60 miles (96.56 kilometers) per hour

d.
186,000 miles (299,792 kilometers) per second

Feedback

Your answer is incorrect.

The correct answer is: 186,000 miles (299,792 kilometers) per second

Question **2**
Incorrect
Mark 0.00 out of 1.00

Flag question

Question text

What is the type of transformer that increases voltage?

Select one:

a.
Step around

b.
Step up

c.
Step over

d.
Step down

Feedback

Your answer is incorrect.

The correct answer is: Step up

Question **3**
Correct
Mark 1.00 out of 1.00

Flag question

Question text

What are the two parts of a switch?

Select one:

a.
Bridge and gap

b.
Lever and fulcrum

c.
Point and armature

d.
Contact and pole

Feedback

Your answer is correct.

The correct answer is: Contact and pole

Question **4**
Correct
Mark 1.00 out of 1.00

Flag question

Question text

What is the moving part of a switch?

Select one:

a.
Arc

b.
Contact

c.
Throw

d.
Pole

Feedback

Your answer is correct.

The correct answer is: Pole

Question **5**
Incorrect
Mark 0.00 out of 1.00

Flag question

Question text

What type of switch can run 2 separate circuits independently and has a neutral position?

Select one:

a.
Rotary

b.
Single throw double pole

c.
Double pole single throw

d.
Double throw single pole

Feedback

Your answer is incorrect.

The correct answer is: Double throw single pole

Question **6**
Correct
Mark 1.00 out of 1.00

Flag question

Question text

What is the simplest type of fuse?

Select one:

a.
Metal conductor

b.
Circuit breaker

c.
Transforming

d.
Time delay

Feedback

Your answer is correct.

The correct answer is: Metal conductor

Question **7**
Incorrect
Mark 0.00 out of 1.00

Flag question

Question text

How many amps should be safely ran through a 15 amp fuse?

Select one:

a.
17

b.
15

c.
10

d.
12

Feedback

Your answer is incorrect.

The correct answer is: 12

Question **8**
Correct
Mark 1.00 out of 1.00

Flag question

Question text

What is the purpose of a circuit protector?

Select one:

a.
Control voltage

b.
Manually control the energy in a circuit

c.
Prevent fire and other damage

d.
Protect wires from the weather and mechanical damage

Feedback

Your answer is correct.

The correct answer is: Prevent fire and other damage

Question **9**
Correct
Mark 1.00 out of 1.00

Flag question

Question text

What, if excessive, causes a circuit breaker to trip?

Select one:

a.
Current

b.
Ohms

c.
Voltage

d.
Resistance

Feedback

Your answer is correct.

The correct answer is: Current

Question **10**
Incorrect
Mark 0.00 out of 1.00

Flag question

Question text

What is the purpose of a transformer?

Select one:

a.
Increase the amount of resistance

b.
Increase or decrease the voltage

c.
Change from AC to DC

d.
Reverse the flow of electricity

Feedback

Your answer is incorrect.

The correct answer is: Increase or decrease the voltage

Question **11**
Correct
Mark 1.00 out of 1.00

Flag question

Question text

How is electrical energy transferred from the primary to the secondary windings of a transformer?

Select one:

a.
With an electrical connection

b.
Induction

c.
With a switch

d.
Mechanically

Feedback

Your answer is correct.

The correct answer is: Induction

Question **12**
Correct
Mark 1.00 out of 1.00

Flag question

Question text

What is required for induction to occur?

Select one:

a.
Magnetic field and moving conductor

b.
High voltage

c.
Open switch

d.
A perfect vacuum with static electricity

Feedback

Your answer is correct.

The correct answer is: Magnetic field and moving conductor

Question **13**
Correct
Mark 1.00 out of 1.00

Flag question

Question text

What type of power can a transformer be used on?

Select one:

a.
AC or DC

b.
DC

c.
None of the above

d.
AC

Feedback

Your answer is correct.

The correct answer is: AC

Question **14**
Partially correct
Mark 0.50 out of 1.00

Flag question

Question text

What electrical components work using the principle of electromagnetism? Select all that apply:

Select one or more:

a.
Transformer

b.
Relay coil

c.
Light bulb

d.
Fuse

Feedback

Your answer is partially correct.

You have correctly selected 1.
The correct answers are: Transformer, Relay coil

Question **15**
Correct
Mark 1.00 out of 1.00

Flag question

Question text

In a relay, what is attracted to the stationary contact when the coil is energized?

Select one:

a.
An armature

b.
A spring

c.
An electron

d.
A motor

Feedback

Your answer is correct.

The correct answer is: An armature

Question **16**
Incorrect
Mark 0.00 out of 1.00

Flag question

Question text

What is the primary advantage of using a relay?

Select one:

a.
Eliminates the need for fuses

b.
Smaller wire used from a remote switch

c.
Faster operation of a motor

d.
Reduces resistance In the circuit

Feedback

Your answer is incorrect.

The correct answer is: Smaller wire used from a remote switch

Question **17**
Correct
Mark 1.00 out of 1.00

Flag question

Question text

What type of contacts are used on a relay switch?

Select one:

a.
Both NC and/or NO are correct

b.
Normally closed (NC)

c.
Normally open (NO)

d.
Step down or step up

Feedback

Your answer is correct.

The correct answer is: Both NC and/or NO are correct

What type of diagram is used to illustrate wiring principles of circuits?

Select one:

a.
Ladder

b.
Moody

c.
Venn

d.
Stepped

Feedback

Your answer is correct.

The correct answer is: Ladder

Question **2**
Correct
Mark 1.00 out of 1.00

Flag question

Question text

What type of current is most commonly generated in North America?

Select one:

a.
Universal

b.
Alternating

c.
Overloading

d.
Direct

Feedback

Your answer is correct.

The correct answer is: Alternating

Question **3**
Correct

Mark 1.00 out of 1.00

Flag question

Question text

What is the term used to identify a rotation of 360° of an AC generator?

Select one:

a.
Hertz

b.
Circle

c.
Period

d.
Moment

Feedback

Your answer is correct.

The correct answer is: Hertz

Question **4**
Incorrect
Mark 0.00 out of 1.00

Flag question

Question text

How many times is peak power created in a single rotation/cycle of an AC generator?

Select one:

a.
1

b.
60

c.
120

d.
2

Feedback

Your answer is incorrect.

The correct answer is: 2

Question **5**
Correct
Mark 1.00 out of 1.00

Flag question

Question text

What is a common source of DC power?

Select one:

a.
Electromagnet

b.
Hydroelectric plant

c.
Wall receptacle

d.
Batteries

Feedback

Your answer is correct.

The correct answer is: Batteries

Question **6**
Correct
Mark 1.00 out of 1.00

Flag question

Question text

What is the primary difference between AC and DC?

Select one:

a.
Amount of voltage

b.
Intensity

c.
Amount of resistance

d.
Direction of electron flow

Feedback

Your answer is correct.

The correct answer is: Direction of electron flow

Question **7**
Correct
Mark 1.00 out of 1.00

Flag question

Question text

What is always present around a conductor when current is flowing through it?

Select one:

a.
Perfect vacuum

b.
Light energy

c.
Magnetic field

d.
Heat energy

Feedback

Your answer is correct.

The correct answer is: Magnetic field

Question **8**
Correct
Mark 1.00 out of 1.00

Flag question

Question text

What type of circuit has only one conductive path for power to get to all loads?

Select one:

a.
Short

b.
Series

c.
Parallel

d.
Complete

Feedback

Your answer is correct.

The correct answer is: Series

Question **9**
Correct
Mark 1.00 out of 1.00

Flag question

Question text

In a parallel circuit, what would be the result of a failed wire to one of the loads?

Select one:

a.
All loads would continue to operate

b.
Only the load with the failed wire would stop operating

c.
All loads would stop operating

d.
Only the last load would stop operating

Feedback

Your answer is correct.

The correct answer is: Only the load with the failed wire would stop operating

Question **10**
Correct
Mark 1.00 out of 1.00

Flag question

Question text

What does EOLR represent ?

Select one:

a.
Electrical Ohm Light Reducer

b.
Energized Over Load Relay

c.
End Open Line Relay

d.
End Of Line Resistor

Feedback

Your answer is correct.

The correct answer is: End Of Line Resistor

Question **11**
Incorrect
Mark 0.00 out of 1.00

Flag question

Question text

What is the purpose of an EOLR?

Select one:

a.
Create resistance in supervisory circuit

b.
Protects circuit from amp over load

c.
Increases voltage during short circuit

d.
Operate the last device in a zone

Feedback

Your answer is incorrect.

The correct answer is: Create resistance in supervisory circuit

Question **12**
Correct
Mark 1.00 out of 1.00

Flag question

Question text

What is the typical voltage of a supervised alarm circuit equipped with an EOLR?

Select one:

a.
240v

b.
24v

c.
20-30mV

d.
120v

Feedback

Your answer is correct.

The correct answer is: 24v

Question **13**
Incorrect
Mark 0.00 out of 1.00

Flag question

Question text

A wire is broken on a supervised normally open parallel alarm circuit equipped with an EOLR. What would the resistance be?

Select one:

a.
12 ohms

b.

0 ohms

c.
4700 ohms

d.
Infinite

Feedback

Your answer is incorrect.

The correct answer is: Infinite

Question **14**
Incorrect
Mark 0.00 out of 1.00

Flag question

Question text

What is supervised in an alarm zone circuit?

Select one:

a.
The devices

b.
The panel

c.
The wires

d.
The devices and wires

Feedback

Your answer is incorrect.

The correct answer is: The wires

Question **15**
Correct
Mark 1.00 out of 1.00

Flag question

Question text

How does an alarm panels' supervisory function identify a broken wire in a circuit?

Select one:

a.
Change in temperature

b.
Change in voltage

c.
Change in wattage

d.
Change in resistance

Feedback

Your answer is correct.

The correct answer is: Change in resistance

Question **16**
Incorrect
Mark 0.00 out of 1.00

Flag question

Question text

According to the "Electron Flow Theory"; in what direction does current flow in a circuit?

Select one:

a.
Positive to negative

b.
Downstream

c.
Upstream

d.
Negative to positive

Feedback

Your answer is incorrect.

The correct answer is: Negative to positive

Question **17**
Correct
Mark 1.00 out of 1.00

Flag question

Question text

What is a point in a circuit called that has neither a surplus, nor shortage of electrons?

Select one:

a.
Sufficient

b.
Hot

c.
Cold

d.
Neutral

Feedback

Your answer is correct.

The correct answer is: Neutral

Question **18**
Incorrect
Mark 0.00 out of 1.00

Flag question

Question text

What is the electrical charge of the earth?

Select one:

a.
Neutral

b.
Ionized

c.
Positive

d.
Negative

Feedback

Your answer is incorrect.

The correct answer is: Neutral

Question **19**
Incorrect
Mark 0.00 out of 1.00

Flag question

Question text

What is the purpose of the neutral wire in a circuit?

Select one:

a.
Provide normal path for current to the source

b.
Provides a source of voltage to the loads in a circuit

c.
Rout stray currents to the earth

d.
Safely discharges short circuits to a neutral location

Feedback

Your answer is incorrect.

The correct answer is: Provide normal path for current to the source

Question **20**
Incorrect
Mark 0.00 out of 1.00

Flag question

Question text

What happens when the resistance of a circuit is decreased?

Select one:

a.
Amps increase

b.
Amperage decreases

c.
Voltage increases

d.
Ohms increase

Feedback

Your answer is incorrect.

The correct answer is: Amps increase

Question **21**
Correct
Mark 1.00 out of 1.00

Flag question

Question text

What is the condition of a circuit when a switch is in the closed position?

Select one:

a.
De-energized

b.
Shorted out

c.
Neutral

d.
Energized

Feedback

Your answer is correct.

The correct answer is: Energized

Question **22**
Correct
Mark 1.00 out of 1.00

Flag question

Question text

What is the circuit resistance of below image ?

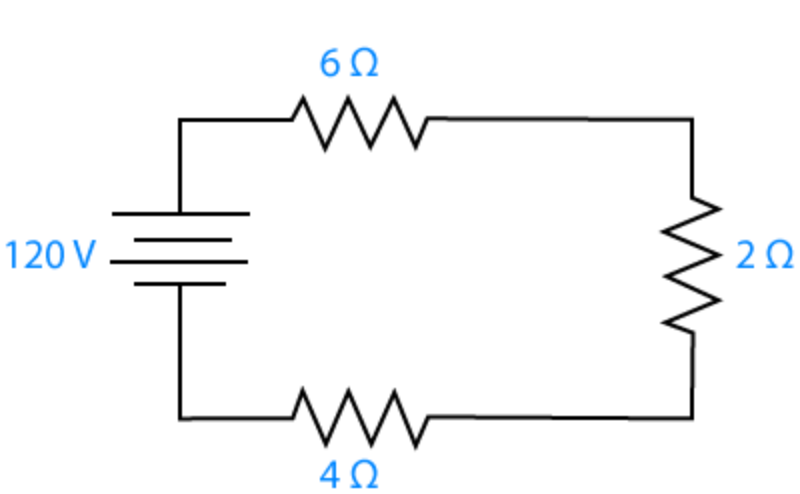

Select one:

a.
12 Ω

b.
6 Ω

c.
4 Ω

d.
8 Ω

Feedback

Your answer is correct.

The correct answer is: 12 Ω

Question **23**
Incorrect
Mark 0.00 out of 1.00

Flag question

Question text

What is the circuit amperage of above image ?

Select one:

a.
480 A

b.
120 A

c.
10 A

d.
30 A

Feedback

Your answer is incorrect.

The correct answer is: 10 A

Question **24**
Correct
Mark 1.00 out of 1.00

Flag question

Question text

What type of circuit is shown in above diagram ?

Select one:

a.
Short

b.
Parallel

c.
Series and Parallel

d.
Series

Feedback

Your answer is correct.

The correct answer is: Series

Question **25**
Correct
Mark 1.00 out of 1.00

Flag question

Question text

What is the total circuit resistance in the series circuit?

Answer: 14.6

Feedback

The correct answer is: 14.6

Question **26**
Correct
Mark 1.00 out of 1.00

Flag question

Question text

What is the circuit ampacity for the series circuit ?

Answer: 8.21

Feedback

The correct answer is: 8.22

Question **27**
Correct
Mark 1.00 out of 1.00

Flag question

Question text

What is the voltage drop across the 3.2 Ohm resistor ?

Answer: 26.30

Feedback

The correct answer is: 26.3

Question **28**

Incorrect

Mark 0.00 out of 1.00

Flag question

Question text

What is the voltage drop across the 2 Ohm resistor ?

Answer: 29.2

Feedback

The correct answer is: 16.44

Question **29**

Correct

Mark 1.00 out of 1.00

Flag question

Question text

What is the voltage drop across the 5 Ohm resistor ?

Answer: 41.05

Feedback

The correct answer is: 41.1

Question **30**
Correct
Mark 1.00 out of 1.00

Flag question

Question text

What is the voltage drop across the 4.4 Ohm resistor ?

Answer: 36.08

Feedback

The correct answer is: 36.17

Question **31**
Incorrect
Mark 0.00 out of 1.00

Flag question

Question text

What is the circuit resistance of the image ?

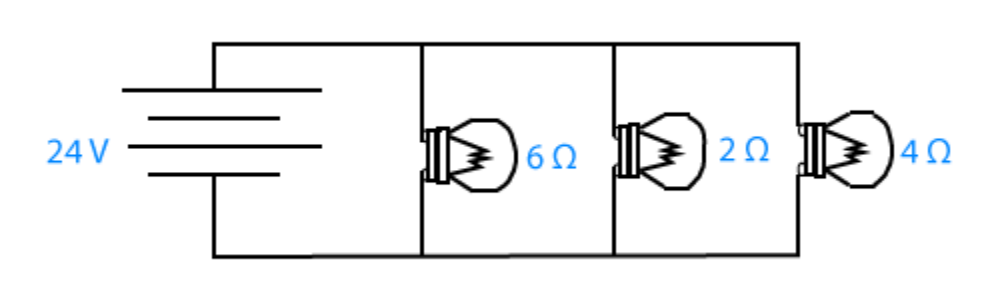

Select one:

a.
21. 1 Ω

b.
4 Ω

c.
1.09 Ω

d.
1. 14 Ω

Feedback

Your answer is incorrect.

The correct answer is: 1.09 Ω

Question **32**
Incorrect
Mark 0.00 out of 1.00

Flag question

Question text

What is the circuit amperage of above image ?

Select one:

a.
12 A

b.
22 A

c.
2 A

d.
3 A

Feedback

Your answer is incorrect.

The correct answer is: 22 A

Question **33**
Correct
Mark 1.00 out of 1.00

Flag question

Question text

What type of circuit is shown in above image ?

Select one:

a.
Series and parallel

b.
Short

c.
Parallel

d.
Series

Feedback

Your answer is correct.

The correct answer is: Parallel

Question **34**

Incorrect

Mark 0.00 out of 1.00

Flag question

Question text

Answer all questions in numerical form only.

What is the voltage drop across each load in the parallel circuit ? Answer 2.22 Volts

Feedback

The correct answer is: 120

Question **35**
Correct
Mark 1.00 out of 1.00

Flag question

Question text
What is the amperage in the conductor at point "A" ?

Answer: 12

Feedback
The correct answer is: 12

Question **36**
Incorrect
Mark 0.00 out of 1.00

Flag question

Question text
What is the amperage in the conductor at point "B" ?

Answer: 8.5

Feedback
The correct answer is: 20.57

Question **37**
Incorrect
Mark 0.00 out of 1.00

Flag question

Question text
What is the amperage in the conductor at point "C" ?

Answer: 8

Feedback

The correct answer is: 28.57

Question **38**
Incorrect
Mark 0.00 out of 1.00

Flag question

Question text

What is the amperage in the conductor at point "D" ?

Answer: 10.90

Feedback

The correct answer is: 39.48

Question **39**
Not answered
Marked out of 1.00

Flag question

Question text

What is the amperage in the conductor at point "E" ?

Answer:

Feedback

The correct answer is: 54.48

Question **40**
Correct
Mark 1.00 out of 1.00

Flag question

Question text

What is the total resistance in the parallel circuit ? Answer 2.22 Ohms

Feedback

The correct answer is: 2.2

When heated by the pilot burner, the thermocouple will generate a small electrical charge: approximately ___ to ___ millivolts

Select one:

a.
10 - 30

b.
10 - 20

c.
20 - 30

d.
10 - 15

Feedback

Your answer is correct.

The correct answer is: 20 - 30

Question **2**
Correct
Mark 1.00 out of 1.00

Flag question

Question text

When the hot junction is heated, a small voltage is generated at the cold junction. The greater the temperature difference between the hot junction and the cold junction the greater the voltage generated. For this reason, it is important that only ____ to ____ inches of the hot junction is heated.

Select one:

a.
1/2 - 7/8

b.
3/8 - 1/2

c.
1/4 - 3/8

d.
1/2 - 3/4

Feedback

Your answer is correct.

The correct answer is: 3/8 - 1/2

Question **3**
Correct
Mark 1.00 out of 1.00

Flag question

Question text

A thermopile is composed of several thermocouples attached together in series. It is easy to distinguish a thermopile from a thermocouple because it is bigger. When subjected to heat, a much greater voltage is created, up to ____ millivolts.

Select one:

a.
750

b.
275

c.
20 - 30

d.
10 - 20

Feedback

Your answer is correct.

The correct answer is: 750

Question **4**
Correct
Mark 1.00 out of 1.00

Flag question

Question text

. Current conducted through the flame (flame current) is generally in the range of ____ _____ amps.

Select one:

a.
2 -4 microamps

b.
30 millivolts

c.
750 millivolts

d.
2 - 4 milliamps

Feedback

Your answer is correct.

The correct answer is: 2 -4 microamps

Question **5**
Correct
Mark 1.00 out of 1.00

Flag question

Question text

Flame Rectification is achieved by placing a grounding electrode (usually the burner head) in the flame which is at least ____ times larger than the flame rod or flame electrode

Select one:

a.
2

b.
20

c.
15

d.
4

Feedback

Your answer is correct.

The correct answer is: 4

Question **6**
Correct
Mark 1.00 out of 1.00

Flag question

Question text

Flame failure response time for low-volume natural gas appliances is _____ seconds.

Select one:

a.
10

b.
90

c.
60

d.
20

Feedback

Your answer is correct.

The correct answer is: 90

What is another name for a Single Phase Induction Motor?

Select one:

a.
Sinusoidal motor

b.
Commutator motor

c.
Rotary motor

d.
Asynchronous motor

Feedback

Your answer is correct.

The correct answer is: Asynchronous motor

Question **2**
Correct
Mark 1.00 out of 1.00

Flag question

Question text

What is the name of the stationary part of a single phase motor?

Select one:

a.
Pole

b.
Shaft

c.
Rotor

d.
Stator

Feedback

Your answer is correct.

The correct answer is: Stator

Question **3**
Correct
Mark 1.00 out of 1.00

Flag question

Question text

Which of the following relates directly with the speed of the motor?

Select one:

a.
The rotational direction

b.
The speed of polarity changes

c.
The length of the shaft

d.
The number of coils (Poles)

Feedback

Your answer is correct.

The correct answer is: The number of coils (Poles)

Question **4**
Correct
Mark 1.00 out of 1.00

Flag question

Question text

In reference to single phase induction motors. What does Ns refer to?

Select one:

a.
Speed of rotation

b.
VA rating

c.
Speed of resistance in ohms

d.
Frequency

Feedback

Your answer is correct.

The correct answer is: Speed of rotation

Question **5**
Correct
Mark 1.00 out of 1.00

Flag question

Question text

The electrical power factor for a single phase motor is low as compared to 3 phase induction motors.

Select one:

- True
- False

Feedback

The correct answer is 'True'.

Question **6**
Correct
Mark 1.00 out of 1.00

Flag question

Question text

What is the most common type of three phase motor ?

Select one:

a.
Electrically commutated

b.
Induction

c.
Permanent split capacitor

d.
Shaded pole

Feedback

Your answer is correct.

The correct answer is: Induction

Question **7**
Partially correct
Mark 0.50 out of 1.00

Flag question

Question text

Which of the following describes the principle of "induction" ? (choose more than one answer if applicable)

Select one or more:

a.
A moving conductor is run through a magnetic field,

b.
A stationary conductor is placed within a moving magnetic field

c.
Opposite polarities attract

d.
Like (the same) polarities attract

Feedback

Your answer is partially correct.

You have correctly selected 1.

,

The correct answers are: A moving conductor is run through a magnetic field,, A stationary conductor is placed within a moving magnetic field

Question **8**

Incorrect

Mark 0.00 out of 1.00

Flag question

Question text

What are the two main components of the three phase induction motor ?

Select one:

a.
The starter and the coil

b.
The stator and the rotor

c.
The commutator and the brushes

d.
The capacitor and the commutator

Feedback

Your answer is incorrect.

The correct answer is: The stator and the rotor

Question **9**

Correct

Mark 1.00 out of 1.00

Flag question

Question text

Which part of an electric motor is in motion when operating ?

Select one:

a.
The rotor

b.
The brushes

c.
The stator

d.
The windings

Feedback

Your answer is correct.

The correct answer is: The rotor

Question **10**
Correct
Mark 1.00 out of 1.00

Flag question

Question text

Which of the following is an alternative name for an induction motor ?

Select one:

a.
Hamster wheel

b.
Squirrel cage

c.
Rotary

d.
Cycling motor

Feedback

Your answer is correct.

The correct answer is: Squirrel cage

Question **11**
Correct
Mark 1.00 out of 1.00

Flag question

Question text

Which of the following refers to the rate of the rotating magnetic field in an induction motor ?

Select one:

a.
Synchronous speed

b.
Rated speed

c.
Winding velocity

d.
Rpm

Feedback

Your answer is correct.

The "rated" speed refers to the rpm of the rotor

The correct answer is: Synchronous speed

Question **12**
Correct
Mark 1.00 out of 1.00

Flag question

Question text

Which of the following is a description of "slip" when referencing an induction motor ?

Select one:

a.
The capacitor's start up delay.

b.
The clutch efficiency of the motor.

c.
The difference between the rated and synchronous motor speeds.

d.
The degree of drive belt lag.

Feedback

Your answer is correct.

The correct answer is: The difference between the rated and synchronous motor speeds.

Question **13**
Correct
Mark 1.00 out of 1.00

Flag question

Question text

The percentage of slip also represents the amount of _____ ?

Select one:

a.
Torque

b.
Horsepower

c.
Efficiency

d.
Amperage draw

Feedback

Your answer is correct.

The correct answer is: Torque

Question **14**
Correct
Mark 1.00 out of 1.00

Flag question

Question text

What does NEMA stand for ?

Select one:

a.
National Electrical Manufacturers Association

b.
Nominal Efficiency Maintenance Accord

c.
None Equivalent Measures Encoded

d.
National Energy Maintenance Enterprise

Feedback

Your answer is correct.

The correct answer is: National Electrical Manufacturers Association

Question **15**
Incorrect
Mark 0.00 out of 1.00

Flag question

Question text

What are the three main electrical components of a variable frequency drive ?

Select one:

a.
Diodes, capacitors, and transistors.

b.
Sources, switches, and loads.

c.
VFD's are non electrical.

d.
Conductors, insulators, and semiconductors.

Feedback

Your answer is incorrect.

The correct answer is: Diodes, capacitors, and transistors.

Why is high voltage more dangerous to human shock than low voltage?

Select one or more:

a.
Low voltage lasts only a split second

b.
High voltage cant be grounded

c.
Low voltage blows breakers

d.
High voltage over comes resistance

Feedback

Your answer is correct.

The correct answer is: High voltage over comes resistance

Question **2**
Correct
Mark 1.00 out of 1.00

Flag question

Question text

Why is water dangerous when working around electrical power?

Select one:

a.
Water increases the voltage

b.
Water gives a path for stray current to the ground

c.
Water reacts chemically with some types of conductors

d.
Water decreases the resistance of the body

Feedback

Your answer is correct.

The correct answer is: Water decreases the resistance of the body

Question **3**
Correct
Mark 1.00 out of 1.00

Flag question

Question text

What is the first thing that should be done when an un-conscious shock victim is discovered?

Select one:

a.
Check for breathing

b.
Determine if the cause of shock is still present

c.
Check for a pulse

d.
Start CPR

Feedback

Your answer is correct.

The correct answer is: Determine if the cause of shock is still present

Question **4**
Correct
Mark 1.00 out of 1.00

Flag question

Question text

List the factors that effect the severity of electrical shock to a body?

Select one:

a.
Ventricular cavitation occurs within the body

b.
The heart muscles cannot move and severe burns

c.
The body goes into a Cardiopulmonary state

d.
The heart beats at an excessive rate and muscles begin to vibrate

Feedback

Your answer is correct.

The correct answer is: The heart muscles cannot move and severe burns

Question **5**
Incorrect
Mark 0.00 out of 1.00

Flag question

Question text

What is the lowest amperage during electrical shock that will likely result in cardiac arrest?

Select one:

a.
above 200 amps

b.
above 200 mA

c.
above 1 amp

d.
above 2 amps

Feedback

Your answer is incorrect.

The correct answer is: above 200 mA

Question **6**
Partially correct
Mark 0.67 out of 1.00

Flag question

Question text

What are variables that effect the severity of electrical shock on the body? select all that apply.

Select one or more:

a.
Duration of exposure to the current

b.
Temperature of the surrounding atmosphere

c.
Path of current through the body

d.
Amount of sweat or moisture on the skin

Feedback

Your answer is partially correct.

You have correctly selected 2.
The correct answers are: Path of current through the body, Amount of sweat or moisture on the skin, Duration of exposure to the current

What is the voltage found in a residential distribution panel?

Select one:

a.
120/240 volt single-phase

b.
120/240 three-phase

c.
24/120 three-phase

d.
24/120 single-phase

Feedback

Your answer is incorrect.

The correct answer is: 120/240 volt single-phase

Question **2**
Correct
Mark 1.00 out of 1.00

Flag question

Question text

What are types of Solder-less connections? Select all that apply.

Select one or more:

a.
Crimp-on

b.
Insulated cap

c.
Press blade

d.
Push in

e.
Thread less

Feedback

Your answer is correct.

The correct answers are: Crimp-on, Insulated cap

Question **3**
Correct
Mark 1.00 out of 1.00

Flag question

Question text

What is used to identify the size and capacity of insulated-cap connectors?

Select one:

a.
Color coded

b.
Marked with wire gauge size

c.
Marked with gauge size and/or color coded

d.
Amperage stamp on end

Feedback

Your answer is correct.

The correct answer is: Marked with gauge size and/or color coded

Question **4**
Correct
Mark 1.00 out of 1.00

Flag question

Question text

Where must most line voltage connections occur?

Select one:

a.
In a light fixture

b.
In a wall

c.
In an electrical panel

d.
In a junction box

Feedback

Your answer is correct.

The correct answer is: In a junction box

Question **5**
Correct
Mark 1.00 out of 1.00

Flag question

Question text

What type of conduit material **can not** come in contact with concrete/cement?

Select one:

a.
Aluminum

b.
Poly vinyl chloride

c.
Thermoplastic

d.
Galvanized steel

Feedback

Your answer is correct.

The correct answer is: Aluminum

Question **6**
Incorrect
Mark 0.00 out of 1.00

Flag question

Question text

What type of conduit should be used for connecting to a motor?

Select one:

a.
LFMC

b.
RMT

c.
EMT

d.
PVC

Feedback

Your answer is incorrect.

The correct answer is: LFMC

Question **7**
Correct
Mark 1.00 out of 1.00

Flag question

Question text

Which type of circuit breaker is used for 240 V circuits?

Select one:

a.
Auto reset

b.
Double pole

c.
Bonded

d.
Rubber jacket

Feedback

Your answer is correct.

The correct answer is: Double pole

Question **8**
Incorrect
Mark 0.00 out of 1.00

Flag question

Question text

Which of the following connections may not be soldered?

Select one:

a.
240V neutral wires

b.
240 V hot wires

c.
Bonding conductors

d.
Switch poles

Feedback

Your answer is incorrect.

The correct answer is: Bonding conductors

Question **9**
Incorrect
Mark 0.00 out of 1.00

Flag question

Question text

Which is the minimum size color code Twist-on Wire Connector that should be used to connect 2 – 14 AWG conductors?

Select one:

a.
Grey

b.
Blue

c.
Orange

d.
Red

Feedback

Your answer is incorrect.

The correct answer is: Orange

Question **10**
Correct
Mark 1.00 out of 1.00

Flag question

Question text

What does the abbreviation EMT indicate?

Select one:

a.
Engineered metal tubing

b.
Electrically molded tubing

c.
Electrical metallic tubing

d.
Engineered molded tubing

Feedback

Your answer is correct.

The correct answer is: Electrical metallic tubing

What would the power rating be for a 5 amp DC single phase motor designed to operate at 12 volts?

Answer: 5

Feedback

Mechanical Energy & Power

Electrical power is the rate at which work is done in an electric circuit in a given time.

Watts (W) are used to measure power.

1 watt is equal to 1 volt multiplied by 1 amp.

Watts = Volts x Amps

Watts = 12V x 5 amps

The correct answer is: 60

Question **2**
Incorrect
Mark 0.00 out of 1.00

Flag question

Question text

If a AC single phase motor had a power rating of 1125 watts, what would the motor be rated in horsepower?

Answer: 1125

Feedback

Horsepower

One horse can lift 330lbs/100ft/min or (55Olbs/ft/sec) which is equivalent to 750 watts of power or 1.0 horsepower in the international system (SI) and the heat equivalent of 2550BTUs (British thermal units) or 4500 kilograms/meters /minute.

Therefore:

Watts ÷ 750watts/hp = HP

1125W ÷ 750W/HP = 1.5 HP

The correct answer is: 1.5

Question **3**
Correct
Mark 1.00 out of 1.00

Flag question

Question text

Select the type of single phase motor that best matches the description below.

A low horsepower, low torque motor that does not use a commutator or capacitor. This motor uses metal rings (typically copper) wrapped around the stator to put the induced alternating magnetic field out of phase. Copper is used for the rings as it has a different resistance when compared to the typical stator construction of steel. It is a self starting motor that has basic construction.

a.
Shaded Pole

b.
Capacitor Start

c.
Split Phase

d.
Permanent Split Phase

Feedback

Your answer is correct.

The shaded pole motor, like all induction motors has a stator and a rotor. The stator carries a main winding and a shaded winding know as the shaded coil. The shaded coil is usually a solid copper ring wrapped around a portion of the stators metal case. A shaded pole motor may have more than one shaded pole. Due to the difference in resistance between the copper shaded ring and the stators metal construction (usually some form of iron) the induced current (present in both metals) creates a difference in polarity within the stator's magnetic field. The shade pole can not be removed from the circuit due to magnetic field being generated from induced current. Shaded pole motors are self starting, low torque, low efficiency, and designed with low power ratings. Shaded pole motors are cheap to make and reliable due to their very basic construction.

The correct answer is:
Shaded Pole

Question **4**
Correct
Mark 1.00 out of 1.00

Flag question

Question text

Select the type of single phase motor that best matches the description below.

This type of motor has high starting torque as well as high running torque. They are good motors for use in applications that require frequent starting and stopping, such as refrigerator pumps. They contain capacitors, 2 windings, and a centrifugal switch.

a.
Shaded Pole

b.
Capacitor Start

c.
Capacitor Start Capacitor Run

d.
Split-Phase

Feedback

Your answer is correct.

Capacitor start-capacitor run motor is much like the capacitor start motor in that it has two windings, a start winding (auxiliary winding) in series with a capacitor and centrifugal switch and a main winding. The purpose of the start winding is the same, to get the motor running and add extra starting torque. The difference is that there is a capacitor in parallel with the start winding that does not get remove from the circuit, only the start capacitor gets remove when the motor get up to 75% of rated speed. The purpose of the capacitor that stays in the circuit is to keep the starting winding active and out of phase with the main winding. Keeping both windings in use will increase torque while the motor is running. This motor is good for higher inertia loads and where frequent starting and stopping are required. It is used to in pumps present in refrigerators, air conditioners, compressor tools and many loads of this nature.

The correct answer is:
Capacitor Start Capacitor Run

Question **5**
Incorrect
Mark 0.00 out of 1.00

Flag question

Question text

Select the type of single phase motor that best matches the description below.

This type of motor uses 2 windings, a start winding and a run winding. The start winding is removed from the circuit once the motor gets up to speed through the use of a centrifugal switch. Starting of the motor is achieved by using different gauge wire for the windings and starting torque is low. The different gauge windings gives them a different resistance and therefore puts their magnetic fields out of phase and the rotor begins to spin. Once the velocity of the rotor reaches a certain threshold the start winging is removed from the circuit and the rotor continues to spin and "chase" the magnetic field being generated by the run winding.

a.
Split-Phase

b.
Capacitor Start

c.
Permanent Split Capacitor

d.
Shaded Pole

Feedback

Your answer is incorrect.

The split phase motor typically uses a single phase 120 volt power supply and has a rating of 1 HP or less. Split phase motors are used in applications where starting torque requirements are low. Common applications of split phase motors include: fans, blowers, pumps, office machines, and tools, such as small saws or drill presses. The split phase motor has a start and run winding. Both windings are energized when the motor is started. When the motor reaches about 75% of its rated full load speed, the start winding is disconnected from the circuit by a centrifugal switch.

Split-phase motors are also known as resistance phase motors. This is because they have additional resistance added to the start winding. Due to the main winding having a different resistance when compared to the starting winding it will put each winding out of phase, creating a rotational magnetic field and force the rotor to start moving. This starting winding will give the initial push to start the rotation, and the main winding will keep the motor running.

The correct answer is:
Split-Phase

Question **6**
Correct
Mark 1.00 out of 1.00

Flag question

Question text

The graphic below shows DC current powering a motor through the use of a mechanical commutator.

Feedback

Your answer is correct.

The correct answer is:
The graphic below shows [DC] current powering a motor through the use of a mechanical commutator.

Question **7**
Correct
Mark 1.00 out of 1.00

Flag question

Question text

The term Hertz is used when making reference to which of the following?

Select one:

a.
Voltage

b.
Amperage

c.
Frequency

d.
Current

Feedback

Your answer is correct.

Frequency

Frequency is how often something repeats. In alternating current, the frequency is the number of times a sine wave completes a cycle going from positive to negative repeating in a given time period (seconds). It is measured in hertz. Hertz is the number of cycles per second (one hertz is equal to one cycle per second). The more cycle that occurs per second, the higher the frequency. In north America the frequency of the voltage and current delivered to homes and business is 60Hz.

The correct answer is: Frequency

Question **8**
Correct
Mark 1.00 out of 1.00

Flag question

Question text

The graphic below shows a frequency of Answer 7 Hz.

Feedback

Frequency

Frequency is how often something repeats. In alternating current, the frequency is the number of times a sine wave completes a cycle going from positive to negative repeating in a given time period (seconds). It is measured in hertz. Hertz is the number of cycles per second (one hertz is equal to one cycle per second). The more cycle that occurs per second, the higher the frequency. In north America the frequency of the voltage and current delivered to homes and business is 60Hz.

The number of complete cycles in the graphic is 7 cycles elapsed over a period of 1 second; therefore, 7Hz.

The correct answer is: 7

Question **9**
Incorrect
Mark 0.00 out of 1.00

Flag question

Question text

_____ is the measure of the force required to cause rotation.

Select one:

a.
Power

b.
Pressure

c.
Torque

d.
Force

Feedback

Your answer is incorrect.

Torque

Torque is the measure of the force that can cause an object to rotate. The more torque a motor produces the more work it can do. The torque output of a motor is the amount of rotational force that the motor develops and is measured in Newton-meters (Nm). The torque and speed relationship are inversely proportional since the rated output power of a motor is fixed value. As output speed increases, the available output torque decreases proportionately. The same holds true if the output speed decreases, the available output torque increases proportionately.

The correct answer is: Torque

Question **10**
Correct
Mark 1.00 out of 1.00

Flag question

Question text

The most common motor used in the HVAC industry is the _____ motor.

Select one:

a.

Split-Phase

b.
Shaded Pole

c.
Permanent-Split Capacitor Motor

d.
Capacitor Start Capacitor Run

Feedback

Your answer is correct.

Permanent-split capacitor motor is much like the capacitor start motor in that it has two windings, a start winding (auxiliary winding) with a capacitor in series and the main winding. The purpose of the start winding with the capacitor is to create a rotating magnetic field. The difference is that the capacitor and the start winding remain in the circuit when the motor gets up to rated speed. The advantage being higher efficiency and higher power output. Another difference worth noting is no starting mechanism (centrifugal switch) is needed and the rotation is reversible. Special applications include fans and blowers, air conditioners, coolers, furnaces, unit heaters, roof ventilators, dehumidifiers, garage door openers, and other applications that more torque. ***The permanent-split capacitor motor is by far the most common motor encountered in the HVAC industry.***

The correct answer is: Permanent-Split Capacitor Motor

Question **11**
Incorrect
Mark 0.00 out of 1.00

Flag question

Question text

_____ is a measure of how fast energy is applied or consumed in a given amount of time.

Select one:

a.
Power

b.
Pressure

c.
Amperage

d.
Torque

Feedback

Your answer is incorrect.

Mechanical Energy & Power

Electrical power is the rate at which work is done in an electric circuit in a given time.

Watts (W) are used to measure power.

1 watt is equal to 1 volt multiplied by 1 amp.

Watts = Volts x Amps

One watt is equal to one joule of work done per second.

Watt = Joule/second

The correct answer is: Power

Question **12**
Incorrect
Mark 0.00 out of 1.00

Flag question

Question text

Which of the following is **not** a type of Single phase motor?

Select one:

a.
3 Pole

b.
2 Pole

c.
Split-phase

d.
4 Pole

Feedback

Your answer is incorrect.

The correct answer is: 3 Pole

Question **13**
Correct
Mark 1.00 out of 1.00

Flag question

Question text

What type of single-phase motor does not use any powered windings or starters to get the rotor spinning.

Select one:

a.
Shaded pole motors

b.
Split phase motors

c.
PSM motor

d.
Capacitor Motors

Feedback

Your answer is correct.

The correct answer is: Shaded pole motors

Question **14**
Correct
Mark 1.00 out of 1.00

Flag question

Question text

What type of Single phase motor is considered to have a high starting torque?

Select one:

a.
Split-phase motor

b.
Capacitor-start motor

c.
Shaded pole motor

d.
Capacitor start-capacitor run motor

Feedback

Your answer is correct.

Capacitor Start Capacitor Run

Capacitor start-capacitor run motor is much like the capacitor start motor in that it has two windings, a start winding (auxiliary winding) in series with a capacitor and centrifugal switch and a main winding. The purpose of the start winding is the same, to get the motor running and add extra starting torque. The difference is that there is a capacitor in parallel with the start winding that does not get remove from the circuit, only the start capacitor gets remove when the motor get up to 75% of rated speed. The purpose of the capacitor that stays in the circuit is to keep the starting winding active and out of phase with the main winding. Keeping both windings in use will increase torque while the motor is running. This motor is good for higher inertia loads and where frequent starting and stopping are required. It is used to in pumps present in refrigerators, air conditioners, compressor tools and many loads of this nature.

The correct answer is: Capacitor start-capacitor run motor

Question **15**

Incorrect

Mark 0.00 out of 1.00

Flag question

Question text

A device used to alter the electrical power being delivered to a motor for the purpose of speed control is called a VFD. What does VFD stand for?

a.
Voltage Fluctuating Device

b.
Variable Flow Device

c.
Variable Frequency Device

d.
Voltage Frequency Device

Feedback

Your answer is incorrect.

The correct answer is:
Variable Frequency Device

Question **16**
Correct
Mark 1.00 out of 1.00

Flag question

Question text

An ECM is used to take alternating current and convert it to a fluctuating direct current at a rate that can be altered. What does ECM stand for?

a.
Electronic Capacitor Motor

b.

Electronically Controlled Motor

c.
Electronically Commutated Motor

d.
Elevated Capacity Motor

Feedback

Your answer is correct.

Electronically Commutated Motors (ECM)

An ECM controller converts alternating current single phase power to direct current power and then pulses that current at a desired frequency. This allows control over the motors speed in a similar way to a VFD. ECMs are a very efficient way to vary the speed of a motor and they offer some advantages over VFD controlled motors. They are low heat devices, create low startup/shutoff velocities, and quiet while in operation. These advantages are typically applied to HVAC systems and can benefit filter performance, noise, wear on the system, temperature accuracy/spill over, and longevity.

The correct answer is:
Electronically Commutated Motor

Question **17**
Incorrect
Mark 0.00 out of 1.00

Flag question

Question text

What type of protection method would be necessary to prevent unwanted starting of a motor after a power failure?

a.

Rotational Protection

b.
Overcurrent protection

c.
Thermal protection

d.
Low voltage protection

Feedback

Your answer is incorrect.

Low Voltage Protection

Low voltage protection (LVP) is primarily used after an interruption in power is experienced. After a power outage it can be important to ensure that some electric motors do not power back on before certain conditions are met, this is where LVP is utilized. This is accomplished through relays and switches that would be part of the motors wiring.

The correct answer is:
Low voltage protection

Question **18**
Correct
Mark 1.00 out of 1.00

Flag question

Question text

What statement best describes VFD operation?

a.
A VFD is a type of electric motor that can vary the power rating depending on the current load on the motor. It will always have the rated horsepower no matter what load is placed on the motor.

b.
A VFD converts alternating current to pulsing direct current before sending power to the electric motor.

c.
A VFD alters the frequency of AC power to an electric motor. This can alter the speed of the electric motor as a motors speed is directly related to the delivered frequency.

d.
A VFD is a protection device used in all electric motors that can prevent burnout and overheating.

Feedback

Your answer is correct.

Variable Frequency Drive

Variable frequency drive (VFD) is a motor controller placed between the motor and power supply that can change the frequency (Hz) and voltage of the power supplied to an electric motor. Using a VFD will allow you to control the motors speed, power, start velocity, and stop velocity. These devices can be used to save power, match motors to their applications, and even extend the usable life of a motor. VFDs can be integrated into newer smart devices and controllers to use intelligent applications of motor technology. Usually you will find VFD on fans, pumps, and compressors where different operating speeds are a requirement.

The correct answer is:
A VFD alters the frequency of AC power to an electric motor. This can alter the speed of the electric motor as a motors speed is directly related to the delivered frequency.

Question **19**
Incorrect
Mark 0.00 out of 1.00

Flag question

Question text

Select the advantages an electronically commutated motor might have over a motor powered by a variable frequency drive.

a.
Low start and stop velocities

b.
Low heat output

c.
Reduced power consumption

☑

d.
More powerful

☑

e.
Longer life

☐

f.
Quiet operation

Feedback

Your answer is incorrect.

Electronically Commutated Motors (ECM)

An ECM controller converts alternating current single phase power to direct current power and then pulses that current at a desired frequency. This allows control over the motors speed in a similar way to a VFD. ECMs are a very efficient way to vary the speed of a motor and they offer some advantages over VFD controlled motors; ***they are low heat devices, create low startup/shutoff velocities, and are quiet while in operation***. These advantages are typically applied to HVAC systems and can benefit filter performance, noise, wear on the system, temperature accuracy/spill over, and longevity.

The correct answers are:
Low start and stop velocities,

Quiet operation,

Low heat outpu

What is used to start the rotation of a three phase induction motor as compared to a single phase motor?

Select one:

a.
Start winding

b.
Electromagnetic induction

c.
Higgs accelerator

◉

d.
Start Capacitor

Feedback

Your answer is incorrect.

The correct answer is: Electromagnetic induction

Question **2**
Correct
Mark 1.00 out of 1.00

Flag question

Question text

In reference to motors, the transfer of energy from a magnetic field into a conductor is known as what?

Select one:

a.
electromagnetic induction

b.
Centrifugal force

c.
Inverse induction

d.
Synchronous phasing

Feedback

Your answer is correct.

The correct answer is: electromagnetic induction

Question **3**
Correct
Mark 1.00 out of 1.00

Flag question

Question text

How many Watts of power would be the result of having 5 Amps being pushed by 120 Volts?

Select one:

a.
24

b.
360

c.
0.042

d.
600

Feedback

Your answer is correct.

Power is measured in watts (volts x amps) and a minus voltage times a minus current equals a positive watt.

The correct answer is: 600

Question **4**
Incorrect
Mark 0.00 out of 1.00

Flag question

Question text

The _____ is a series of stationary, conductive windings offset electrically at 120 degrees to initiate current flow.

Select one:

a.
Stator

b.
Inducer

c.
Motor

d.
Rotor

Feedback

Your answer is incorrect.

The correct answer is: Stator

Question **5**
Incorrect
Mark 0.00 out of 1.00

Flag question

Question text

The _____ is a series of conductive copper bars in high-grade silicon steel formed into a spinning drum.

Select one:

a.
Capacitor

b.
Rotor

c.
Stator

d.
Inducer

Feedback

Your answer is incorrect.

The correct answer is: Rotor

Question **6**
Correct
Mark 1.00 out of 1.00

Flag question

Question text

The rate of the rotating magnetic field in the stator is called the _____ speed.

Select one:

a.
Synchronous

b.
Adjustable

c.
Slip

d.
Variable

Feedback

Your answer is correct.

The correct answer is: Synchronous

Question **7**
Correct
Mark 1.00 out of 1.00

Flag question

Question text

_____ is measured as a percentage difference between the synchronous and rated speed.

Select one:

a.
Slip

b.

Torque

c.
RPM

d.
Shift

Feedback

Your answer is correct.

The correct answer is: Slip

Question **8**
Correct
Mark 1.00 out of 1.00

Flag question

Question text

Match the following with the best description of the motor application.

Can be programmed at any time to do whatever job is required.	Answer 1 VFD Motor
Typically programmed for a single purpose at the factory.	Answer 2 ECM Motor

Feedback

Your answer is correct.

The correct answer is: Can be programmed at any time to do whatever job is required. → VFD Motor, Typically programmed for a single purpose at the factory. → ECM Motor

Question **9**
Correct
Mark 1.00 out of 1.00

Flag question

Question text

Which of the following motors has the ability to convert an AC voltage to DC voltage for its operation?

a.
Split capacitor

b.
Single phase induction

c.
Shaded pole

d.
ECM

Feedback

Your answer is correct.

The correct answer is:
ECM

Question **10**
Incorrect
Mark 0.00 out of 1.00

Flag question

Question text

The three-phase power curve consists of three separate single-phase curves evenly separated. How far apart are these curves spaced?

a.
45 degrees

b.
120 degrees

c.
90 degrees

d.
60 degrees

Feedback

Your answer is incorrect.

The correct answer is:
120 degrees

Question **11**
Correct
Mark 1.00 out of 1.00

Flag question

Question text

For the same size, the single-phase induction motors develop about _____% of the output as that of three-phase induction motors.

a.
60

b.
75

c.
50

d.
30

Feedback

Your answer is correct.

The correct answer is:
50

Question **12**
Incorrect
Mark 0.00 out of 1.00

Flag question

Question text

Identify the image shown.

a.
Modified DC

b.
Rectified DC

c.
Modified AC

d.
Filtered DC

Feedback

Your answer is incorrect.

The correct answer is:
Filtered DC

Which of the following is a common type of single-phase motor?

a.
Multi-phase motor

b.
Induction motor

c.
Synchronous motor

d.
AC-DC motor

Feedback

Your answer is incorrect.

The correct answer is:
Induction motor

Question **2**
Correct
Mark 1.0 out of 1.0

Flag question

Question text

What is the starting method commonly used for single-phase motors?

a.
Delta starter

b.
ECM

c.
Capacitor start

d.
VFD

Feedback

Your answer is correct.

The correct answer is:
Capacitor start

Question **3**
Correct
Mark 1.0 out of 1.0

Flag question

Question text

In a split-phase single-phase motor, what is the purpose of the auxiliary winding?

a.
To provide a phase shift for starting

b.

To reverse the direction of rotation

c.
To increase the voltage

d.
To regulate the speed

Feedback

Your answer is correct.

The correct answer is:
To provide a phase shift for starting

Question **4**
Correct
Mark 1.0 out of 1.0

Flag question

Question text

Which of the following would be a typical application of a shaded-pole single-phase motor?

a.
E-vehicles

b.
Industrial pumps

c.
High-torque applications

d.
Residential HVAC Fan

Feedback

Your answer is correct.

The correct answer is:
Residential HVAC Fan

Question **5**
Incorrect
Mark 0.0 out of 1.0

Flag question

Question text

What is the purpose of a run capacitor in a capacitor-start,capacitor-run single-phase motor?

a.
To reverse the motor direction as a result of a phase shift

b.
To improve the power factor

c.
To help start the motor

d.
To provide additional torque during running

Feedback

Your answer is incorrect.

The correct answer is:
To provide additional torque during running

Question **6**
Correct
Mark 1.0 out of 1.0

Flag question

Question text

What is the purpose of the centrifugal switch in a split-phase single-phase motor?

a.
To control the torque

b.
To regulate the voltage

c.
To disconnect the start winding once running

d.
To control the speed

Feedback

Your answer is correct.

The correct answer is:
To disconnect the start winding once running

Question **7**
Incorrect
Mark 0.0 out of 1.0

Flag question

Question text

Which component is responsible for creating a rotating magnetic field in a single-phase induction motor?

a.
Rotor

b.
Capacitor

c.
Commutator

d.
Stator

Feedback

Your answer is incorrect.

The correct answer is:
Stator

Question **8**
Correct
Mark 1.0 out of 1.0

Flag question

Question text

What is the primary disadvantage of a split-phase motor?

a.
Time varying frequencies

b.
Inefficient operation

c.
Low starting torque

d.
Limited speed control

Feedback

Your answer is correct.

The correct answer is:
Low starting torque

Question **9**
Correct
Mark 1.0 out of 1.0

Flag question

Question text

In a 3-phase motor, what is the phase angle between the voltages of each phase?

a.
60 degrees

b.
180 degrees

c.

120 degrees

d.
90 degrees

Feedback

Your answer is correct.

The correct answer is:
120 degrees

Question **10**
Incorrect
Mark 0.0 out of 1.0

Flag question

Question text

In a 3-phase motor, how is the direction of rotation reversed?

a.
By changing the voltage

b.
By changing the frequency

c.
By reversing the stator windings

d.
By switching any two phase connections

Feedback

Your answer is incorrect.

The correct answer is:
By switching any two phase connections

Question **11**
Incorrect
Mark 0.0 out of 1.0

Flag question

Question text

What is the significance of the term ***"slip"*** in a 3-phase induction motor?

a.
It refers to the rotor slipping out of position

b.
It is the difference between synchronous speed and rotor speed

c.
It indicates a fault in the stator windings

d.
It measures the efficiency of the motor

Feedback

Your answer is incorrect.

The correct answer is:
It is the difference between synchronous speed and rotor speed

Question **12**
Correct
Mark 1.0 out of 1.0

Flag question

Question text

What happens to the torque in a 3-phase induction motor as the load increases?

a.
Decreases

b.
Remains constant

c.

Reverses direction

d.
Increases

Feedback

Your answer is correct.

The correct answer is:
Decreases

Electrical Circuits are opened or closed by the use of a _____?

Select one:

a.
Power source

b.
Transformer

c.
Switch

d.
Motor

Feedback

Your answer is correct.

The correct answer is: Switch

Question **2**
Correct
Mark 1.00 out of 1.00

Flag question

Question text

A switch that has one pole and one contact is known as _____?

Select one:

a.

4PDT

b.
SPST

c.
DPDT

d.
SPDT

Feedback

Your answer is correct.

The correct answer is: SPST

Question **3**
Incorrect
Mark 0.00 out of 1.00

Flag question

Question text

If a pole can be thrown in one of two positions it is known as a _____?

Select one:

a.
SPDT

b.
Thermal switch

c.
DPDT

d.
Pressure Switch

Feedback

Your answer is incorrect.

The correct answer is: SPDT

Question **4**
Correct
Mark 1.00 out of 1.00

Flag question

Question text

If a household electric appliance requires 240 volts to operate, how is that done?

Select one:

a.
By connecting to the 240 volt supply at the service panel

b.
Magic

c.
By connecting to a mechanically joined 120 volt supplies

d.
By plugging it in to a single gang box

Feedback

Your answer is correct.

The correct answer is: By connecting to a mechanically joined 120 volt supplies

Question **5**
Correct
Mark 1.00 out of 1.00

Flag question

Question text

All wiring diagrams are drawn to show circuits in what state?

Select one:

a.
Energized

b.
Closed

c.
Operating

d.
At Rest

Feedback

Your answer is correct.

The correct answer is: At Rest

What type of switch uses a concave or convex disk of metal to open or close contacts due to changes in temperature?

Select one:

a.
Flow Switch

b.
Pressure Switch

c.
Flame roll-out Switch

d.
Thermostat

Feedback

Your answer is correct.

The correct answer is: Flame roll-out Switch

Question **2**
Incorrect
Mark 0.00 out of 1.00

Flag question

Question text

A type of switch that is constructed to close a set of contacts on a temperature rise, is an example of a _____?

Select one:

a.
High Limit Switch

b.
Flow Switch

c.
Fan Switch

d.
Aquastat

Feedback

Your answer is incorrect.

The correct answer is: Fan Switch

Question **3**
Correct
Mark 1.00 out of 1.00

Flag question

Question text

What type of devices operate on the principle of different metals expanding at different rates, is commonly used in _____?

Select one:

a.
Light Switches

b.
Thermostats

c.
Pressure switches

d.
Thermometers

Feedback

Your answer is correct.

The correct answer is: Thermostats

Question **4**

Correct

Mark 1.00 out of 1.00

Flag question

Question text

Thermostats use a type of liquid in a bulb to bridge two contacts and close circuits. What is the liquid used?

Select one:

a.
Mercury

b.
Condensate

c.
Silver

d.
H2O

Feedback

Your answer is correct.

The correct answer is: Mercury

Question **5**

Correct

Mark 1.00 out of 1.00

Flag question

Question text

The rate of response in a thermostat can be improved by the addition of what component?

Select one:

a.
A Supplemental Thermostat

b.
A Heat Anticipator

c.
Electrical Connections

d.
Pressure Switches

Feedback

Your answer is correct.

The correct answer is: A Heat Anticipator

Question **6**
Correct
Mark 1.00 out of 1.00

Flag question

Question text

The numbers on a heat anticipator are an indication of current draw in _____?

Select one:

a.
Volts

b.
Ohms

c.
Watts

d.
Amps

Feedback

Your answer is correct.

The correct answer is: Amps

Question **7**
Correct
Mark 1.00 out of 1.00

Flag question

Question text

The “R” Terminal in a thermostat is for what purpose?

Select one:

a.
Ground Connection

b.
Two stage Cooling

c.
Connection to the gas valve

d.
24 Volt supply

Feedback

Your answer is correct.

The correct answer is: 24 Volt supply

Question **8**
Correct
Mark 1.00 out of 1.00

Flag question

Question text

The process of following a set of variables and determining whether corrections need to be made is used in what type of equipment?

Select one:

a.
A Liquid Crystal Display

b.
A Manual Thermostat

c.
A Motor

d.
A Programmable Thermostat

Feedback

Your answer is correct.

The correct answer is: A Programmable Thermostat

Question **9**
Correct
Mark 1.00 out of 1.00

Flag question

Question text

Residential heat pump thermostats have a terminals to energize _____ when is cooling mode.

Select one:

a.
The Reversing Valve

b.
The Ammonia Proportioner

c.
The Tridicator

d.
The Absorption Pump

Feedback

Your answer is correct.

The correct answer is: The Reversing Valve

Question **10**
Correct
Mark 1.00 out of 1.00

Flag question

Question text

In a heat pump thermostat the second stage heating contact controls_____?

Select one:

a.
The limit control

b.
The operation of supplemental heat

c.
The refrigeration cycle

d.
The cooling mode

Feedback

Your answer is correct.

The correct answer is: The operation of supplemental heat

Question **11**
Correct
Mark 1.00 out of 1.00

Flag question

Question text

How can a programmable thermostat be overridden in run mode?

Select one:

a.
By adjusting the mechanical linkage

b.
By changing the wiring

c.
By depressing the + or – button on the control

d.
By taking the unit off the wall

Feedback

Your answer is correct.

The correct answer is: By depressing the + or – button on the control

Question **12**
Correct
Mark 1.00 out of 1.00

Flag question

Question text

Programmable thermostats typically have how many preset schedule types?

Select one:

a.
4

b.
3

c.
2

d.
1

Feedback

Your answer is correct.

The correct answer is: 4

Question **13**
Incorrect
Mark 0.00 out of 1.00

Flag question

Question text

What type of thermostat uses a type of gas between two metallic disks?

Select one:

a.
Gas thermostat

b.
Bellows Thermostat

c.
Metallic disk type thermostat

d.
Link and level thermostat

Feedback

Your answer is incorrect.

The correct answer is: Bellows Thermostat

Question **14**
Incorrect
Mark 0.00 out of 1.00

Flag question

Question text

In a combination Fan/ High limit control the fan switch is located on which side of the unit, if looking at the face.

Select one:

a.
Top

b.
Right Side

c.
Bottom

d.
Left side

Feedback

Your answer is incorrect.

The correct answer is: Left side

Question **15**
Correct
Mark 1.00 out of 1.00

Flag question

Question text

In the combination Fan/ High limit control why would a gas fitter need to remove the brass jumper?

Select one:

a.
To attach a manual switch to the high limit

b.
To supply the high limit with 24 volt power

c.
It is recommended to do so

d.
To supply the fan switch with 24 volt power

Feedback

Your answer is correct.

The correct answer is: To supply the high limit with 24 volt power

Question **16**

Correct
Mark 1.00 out of 1.00

Flag question

Question text

Aquastats are used in what type of appliance?

Select one:

a.
Heat Pumps

b.
Hot Water Boilers

c.
Thermostats

d.
Furnaces

Feedback

Your answer is correct.

The correct answer is: Hot Water Boilers

Question **17**
Incorrect
Mark 0.00 out of 1.00

Flag question

Question text

What are the methods for mounting aquastats? (select all that apply)

Select one or more:

a.
Remote Bulb

b.

Glued in place

c.
Tied with rope

d.
Surface Mounted

e.
Wired connection

f.
Soldered in place

g.
Direct mounted in an immersion well

Feedback

Your answer is incorrect.

The correct answers are: Remote Bulb, Surface Mounted, Direct mounted in an immersion well

Pressuretrols are used in what type of system?

Select one:

a.
Furnaces

b.
Hot water tanks

c.
Water boiler systems

d.
Steam Boiler systems

Feedback

Your answer is incorrect.

The correct answer is: Steam Boiler systems

Question **2**
Correct
Mark 1.00 out of 1.00

Flag question

Question text

Another name for the piping (siphon loop) installed from the boiler to the pressuretrol and pressure gauge is called_____?

Select one:

a.
A pigtail

b.
A loop de loop

c.
A spool

d.
A pipe

Feedback

Your answer is correct.

The correct answer is: A pigtail

Question **3**
Correct
Mark 1.00 out of 1.00

Flag question

Question text

When a high limit pressuretrol reaches the set point limit, does the switch open or close its contacts?

Select one:

a.
Close

b.
Open

Feedback

Your answer is correct.

The correct answer is: Open

Question **4**
Incorrect
Mark 0.00 out of 1.00

Flag question

Question text

When burners systems operate with gas pressures that exceed 0.5 Psig what is required to be installed according to the CSA B149.3?

Select one:

a.
Temperature switches

b.
A manual shutoff

c.
Gas pressure switches

d.
Pressure gauge

Feedback

Your answer is incorrect.

The correct answer is: Gas pressure switches

Question **5**
Correct
Mark 1.00 out of 1.00

Flag question

Question text

According the CSA B 149.3, if the pressure drops below 50% of the appliance regulator set point, the low pressure normally open switch is required to_____?

Select one:

a.
Open

b.
Remain energized

c.
Nothing is required

d.
Close

Feedback

Your answer is correct.

The correct answer is: Open

Question **6**
Correct
Mark 1.00 out of 1.00

Flag question

Question text

In general, an air proving switch is of what basic design?

Select one:

a.
A manually actuated push button

b.
A single pole

c.
A time delay switch

d.

A double pole

Feedback

Your answer is correct.

The correct answer is: A single pole

Question **7**
Correct
Mark 1.00 out of 1.00

Flag question

Question text

When the air supply is controlled mechanically, before ignition the blower must do what?

Select one:

a.
Pre purge the combustion chamber

b.
Drain the condensate

c.
Trip the high limit

d.
Nothing

Feedback

Your answer is correct.

The correct answer is: Pre purge the combustion chamber

Question **8**
Correct
Mark 1.00 out of 1.00

Flag question

Question text

What type of switch does the image show?

Select one:

a.
Double pole switch

b.
Flow switch

c.
Normally closed pressure switch

d.
Normally open pressure switch

Feedback

Your answer is correct.

The correct answer is: Normally closed pressure switch

What are two types of L.W.C.O. switches?

Select one:

a.
Fan switch and Probe type

b.
Float type and Cold Water type

c.
Steam type and Hot water type

d.
Float type and Probe type

Feedback

Your answer is correct.

The correct answer is: Float type and Probe type

Question **2**
Incorrect
Mark 0.00 out of 1.00

Flag question

Question text

In conjunction with steam boilers how many automatic low water cut offs must be installed?

Select one:

a.
2

b.
3

c.
4

d.
None

Feedback

Your answer is incorrect.

The correct answer is: 2

Question **3**
Correct
Mark 1.00 out of 1.00

Flag question

Question text

If a low water cutoff is attached to the boiler by pipe and fittings what must not be places upstream of the L.W.C.O?

Select one:

a.
PRV’s

b.
Check valves

c.
Shutoff valves of any type

d.
Globe Valves

Feedback

Your answer is correct.

The correct answer is: Shutoff valves of any type

Question **4**
Incorrect
Mark 0.00 out of 1.00

Flag question

Question text

To facilitate cleaning of the lines with L.W.C.O.'s what shall be placed at every right angle turn?

Select one:

a.
A 90°

b.
Plugs

c.
A cross fitting

d.
A tee

Feedback

Your answer is incorrect.

The correct answer is: A cross fitting

Question **5**

Incorrect
Mark 0.00 out of 1.00

Flag question

Question text

In a hot water heating boiler, the installed L.W.C.O. must be equipped with what device?

Select one:

a.
A manual reset switch

b.
An automatic reset

c.
A ball valve

d.
A pressure sensor

Feedback

Your answer is incorrect.

The correct answer is: A manual reset switch

Question **6**
Incorrect
Mark 0.00 out of 1.00

Flag question

Question text

At what height are L.W.C.O.'s designed to be installed, according to manufacturer's literature?

Select one:

a.
Above the highest safe water level

b.
Above the lowest safe water level

c.
Above the boiler

d.
Anywhere

Feedback

Your answer is incorrect.

The correct answer is: Above the lowest safe water level

Question **7**
Correct
Mark 1.00 out of 1.00

Flag question

Question text

When attaching L.W.C.O.'s to a hot water boiler with pipe what is the minimum size of pipe that can be used?

Select one:

a.
3/4" NPS

b.
3" NPS

c.
1" NPS

d.
2" NPS

Feedback

Your answer is correct.

The correct answer is: 1" NPS

Question **8**
Incorrect
Mark 0.00 out of 1.00

Flag question

Question text

When testing a L.W.C.O. in a hot water boiler install, does the system need to be drained?

Select one:

a.
Yes

b.
No

Feedback

Your answer is incorrect.

The correct answer is: No

Question **9**
Correct
Mark 1.00 out of 1.00

Flag question

Question text

What type of switch is indicated by the following symbol?

Select one:

a.
Normally open pressure switch

b.
Normally closed temperature switch

c.
Normally open float switch

d.
Normally closed float switch

Feedback

Your answer is correct.

The correct answer is: Normally open float switch

Can flow switches be used on water lines only?

Select one:

a.
Yes

b.
No

c.
Maybe

d.
Don't know

Feedback

Your answer is correct.

The correct answer is: No

Question **2**
Correct
Mark 1.00 out of 1.00

Flag question

Question text

A flow switch designed to sense air movement is known as?

Select one:

a.
A sail switch

b.
An air switch

c.
A boat switch

d.
A rudder switch

Feedback

Your answer is correct.

The correct answer is: A sail switch

How many contacts are on a SPDT switch?

Select one:

a.
none

b.
three

c.
Two

d.
One

Feedback

Your answer is incorrect.

The correct answer is: Two

Question **2**
Incorrect
Mark 0.00 out of 1.00

Flag question

Question text

Switches can be operated by hand or they can be activated in response to changes in :

Select one or more:

a.
Magnetism

b.
Temperature

c.
Color

d.
smell

e.
Pressure

f.
Fluid Movement

g.
Space

Feedback

Your answer is incorrect.

The correct answers are: Temperature, Pressure, Fluid Movement, Magnetism

Question **3**
Partially correct
Mark 0.75 out of 1.00

Flag question

Question text

Select four switches that are activated in response to changes in temperature :

Select one or more:

a.
Flow Switch

b.
Pressure Switch

c.
Flame Roll-out

d.
High Limit Switch

e.
Fan Switch

f.
Thermostat Switch

g.
Vacuum Switch

Feedback

Your answer is partially correct.

You have correctly selected 3.
The correct answers are: Thermostat Switch, Fan Switch, High Limit Switch, Flame Roll-out

Question **4**
Correct
Mark 1.00 out of 1.00

Flag question

Question text

What is the operating principle for bimetal switches?

Select one:

a.
Different weight

b.
Different density

c.
Different melting points

d.

Different coefficient of expansion

e.
Different standard of conductivity

Feedback

Your answer is correct.

These devices use the warping action created when two dissimilar metals having different coefficients of expansion are joined together.

The correct answer is: Different coefficient of expansion

Question **5**
Partially correct
Mark 0.67 out of 1.00

Flag question

Question text

Complete the description of the switch illustrated below.

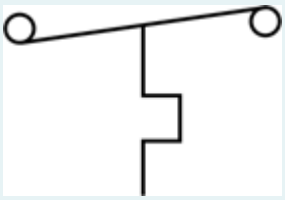

A normally closed switch that opens on a drop in temperature.

Feedback

Your answer is partially correct.

You have correctly selected 2.
The correct answer is:
Complete the description of the switch illustrated below.

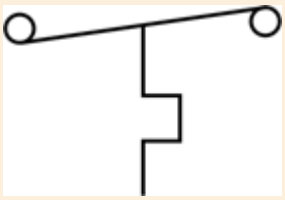

A normally [closed] switch that [opens] on a [rise] in temperature.

Question **6**
Correct
Mark 1.00 out of 1.00

Flag question

Question text

Select the property a spiral bimetal strip uses in mechanical thermostat to tip the mercury and completes the circuit.

Select one:

a.
expansion and contraction

b.
elasticity

c.
malleability

d.
tensile strength

e.
conductivity

f.
density

Feedback

Your answer is correct.

As the room cools, the bimetal strip contracts and moves the glass bulb. The mercury in the bulb engulfs the two contacts completing the circuit energizing the gas valve.

The correct answer is: expansion and contraction

Question **7**
Correct
Mark 1.00 out of 1.00

Flag question

Question text

What is the purpose of a heat anticipator?

Select one:

a.
Avoid over-firing of the furnace

b.
Activate heating or cooling in fast temperature change situations

c.
Avoid overshooting room temperature

d.
Balance the temperature across heating zones

Feedback

Your answer is correct.

To reduce the response time of the thermostat and reduce overshooting of the room temperature ?

The correct answer is: Avoid overshooting room temperature

Question **8**

Incorrect

Mark 0.00 out of 1.00

Flag question

Question text

What do the numbers on a heat anticipator indicate?

Select one:

a.
Amperage

b.
Temperature Range

c.
Millivoltage

d.
Voltage

Feedback

Your answer is incorrect.

Amperage through the coil of the anticipator

The correct answer is: Amperage

Question **9**
Incorrect
Mark 0.00 out of 1.00

Flag question

Question text

When is a heat anticipator energized?

Select one:

a.
Once the internal temperature reaches its set minimum

b.
Once the internal temperature reaches its set maximum

c.
When the thermostat open its contacts

d.
When the thermostat closes its contacts

Feedback

Your answer is incorrect.

The correct answer is: When the thermostat closes its contacts

Question **10**
Incorrect
Mark 0.00 out of 1.00

Flag question

Question text

Is a cooling anticipator wired in series or parallel to the thermostat?

Select one:

a.
Parallel

b.
Series

c.
Series and Parallel

Feedback

Your answer is incorrect.

The correct answer is: Parallel

Question **11**
Partially correct
Mark 0.57 out of 1.00

Flag question

Question text

Identify the wiring terminals on the thermostat in the image with their purpose.

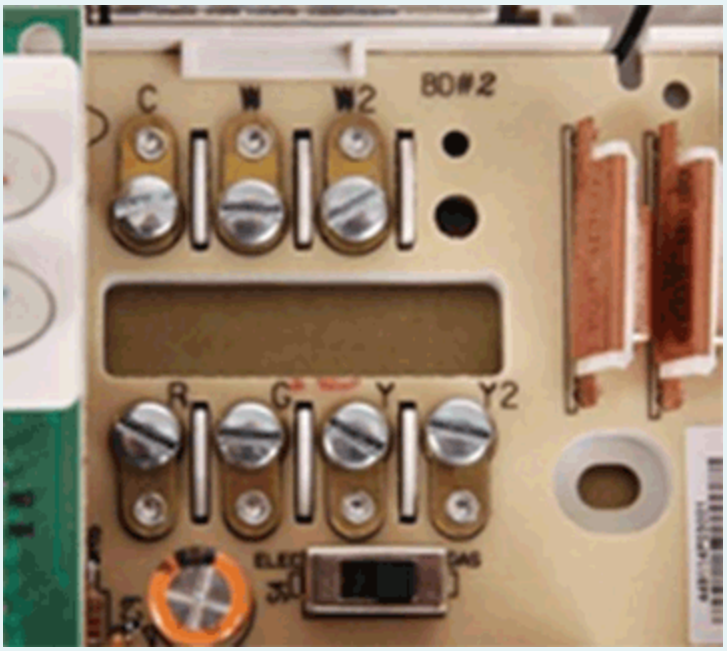

First stage cooling from the thermostat	Answer 1 Y
Neutral from the thermostat to the transformer	Answer 2 C
First stage heating from the thermostat	Answer 3 R
Second stage cooling from the thermostat	Answer 4 Y2
Power from the thermostat to the fan motor relay	Answer 5 G
Second stage heating from the thermostat	Answer 6 W
Power supply to the thermostat	Answer 7 W2

Feedback

Your answer is partially correct.

You have correctly selected 4.
The correct answer is: First stage cooling from the thermostat → Y, Neutral from the thermostat to the transformer → C, First stage heating from the thermostat → W, Second stage cooling from the thermostat → Y2, Power from the thermostat to the fan motor relay → G, Second stage heating from the thermostat → W2, Power supply to the thermostat → R

Question **12**
Partially correct
Mark 2.00 out of 4.00

Flag question

Question text

Using the picture below please complete the following information.

90 degrees F = Answer Fan on

150 degrees F = Answer Fan off

200 degrees F = Answer High Limit

Is there a summer switch on this unit? Answer Yes

Question **13**
Incorrect
Mark 0.00 out of 1.00

Flag question

Question text

What is the purpose of an operating aquastat?

Select one:

a.
To maintain the boiler water temperature.

b.
To ensure the boiler water temperature does not drop below a set value.

c.
To ensure a consistent safe working pressure

d.
To ensure the boiler water temperature does not exceed a set value.

Feedback

Your answer is incorrect.

To maintain the boiler water temperature.

The correct answer is: To maintain the boiler water temperature.

Question **14**
Correct
Mark 1.00 out of 1.00

Flag question

Question text

What is the typical setting for a high limit aquastat?

Select one:

a.
200 °F (93 °C)

b.
250 °F (121 °C)

c.
180 °F (82 °C)

d.
140 °F (60 °C)

Feedback

Your answer is correct.

The correct answer is: 200 °F (93 °C)

Question **15**
Incorrect
Mark 0.00 out of 1.00

Flag question

Question text

Below are the three mounting methods used for aquastats, which method uses an immersion well?

Remote Bulb

Surface Mounted (Strap-on)

Direct Mounted

Select one:

a.
All options use an immersion well

b.
Surface Mounted

c.

Direct Mounted

d.
Remote Bulb

Feedback

Your answer is incorrect.

The correct answer is: Direct Mounted

Question **16**
Incorrect
Mark 0.00 out of 1.00

Flag question

Question text

What is usually applied to the inside of the immersion well prior to inserting the sensing bulb ?

Select one:

a.
Pipe dope

b.
Silicon gel

c.
Teflon paste

d.
Conductive Paste

Feedback

Your answer is incorrect.

The correct answer is: Conductive Paste

Question **17**
Incorrect
Mark 0.00 out of 1.00

Flag question

Question text

What term is used to describe a pressure switch that controls the operation of a steam boiler?

Answer I

Feedback

The correct answer is: pressuretrol

Question **18**

Incorrect

Mark 0.00 out of 1.00

Flag question

Question text

Gas pressure switches are required to be installed on burner systems that exceed Answer 100 psi according to the B149.3 gas code.

Feedback

The correct answer is: 0.5

Question **19**

Correct

Mark 1.00 out of 1.00

Flag question

Question text

How many sensing tubes would you expect to see on a pressure switch that is connected to a draft inducer fan serving a single stage conventional appliance?

Select one:

a.
1

b.
2

c.
3

d.
4

Feedback

Your answer is correct.

Draft inducer fan conventional appliance - one

Single stage condensing – two

Two stage – two pressure switches

Modulating input – three pressure switches

The correct answer is: 1

Question **20**

Partially correct

Mark 0.67 out of 1.00

Flag question

Question text

Complete the description of the switch illustrated below.

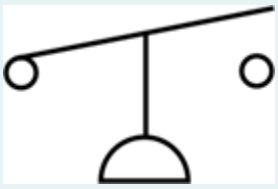

Normally closed pressure switch that closes on a drop in pressure.

Feedback

Your answer is partially correct.

You have correctly selected 2.
The correct answer is:
Complete the description of the switch illustrated below.

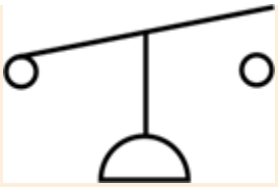

Normally [open] pressure switch that [closes] on a [drop] in pressure.

Question **21**
Correct
Mark 1.00 out of 1.00

Flag question

Question text

What are the two basic types of low water cut-offs?

Select one or more:

- [ ] a. Concentric
- [ ] b. Eccentric
- [x] c. Probe
- [ ] d. Sub-surface
- [ ] e. Injector
- [x] f. Float

Feedback

Your answer is correct.

The correct answers are: Float, Probe

Question **22**
Correct
Mark 1.00 out of 1.00

Flag question

Question text

Where would you find the low water cut-off located on a steam boiler?

Select one:

a.
On the bottom of the boiler 2 inches above the low water level

b.
Above the boiler

c.
Not required on steam boilers

d.
On the side of the boiler at the minimum water level

Feedback

Your answer is correct.

The correct answer is: On the side of the boiler at the minimum water level

Question **23**
Incorrect
Mark 0.00 out of 1.00

Flag question

Question text

Identify the switch illustrated below :

Select one:

a.
Pressure Switch

b.
Temperature Switch

c.
Flow Switch

d.
Rocker Switch

Feedback

Your answer is incorrect.

The correct answer is: Flow Switch

Question **24**
Correct
Mark 1.00 out of 1.00

Flag question

Question text

Referring to the illustration below, if the SPST switch contacts are closed, would the circulating pump be energized?

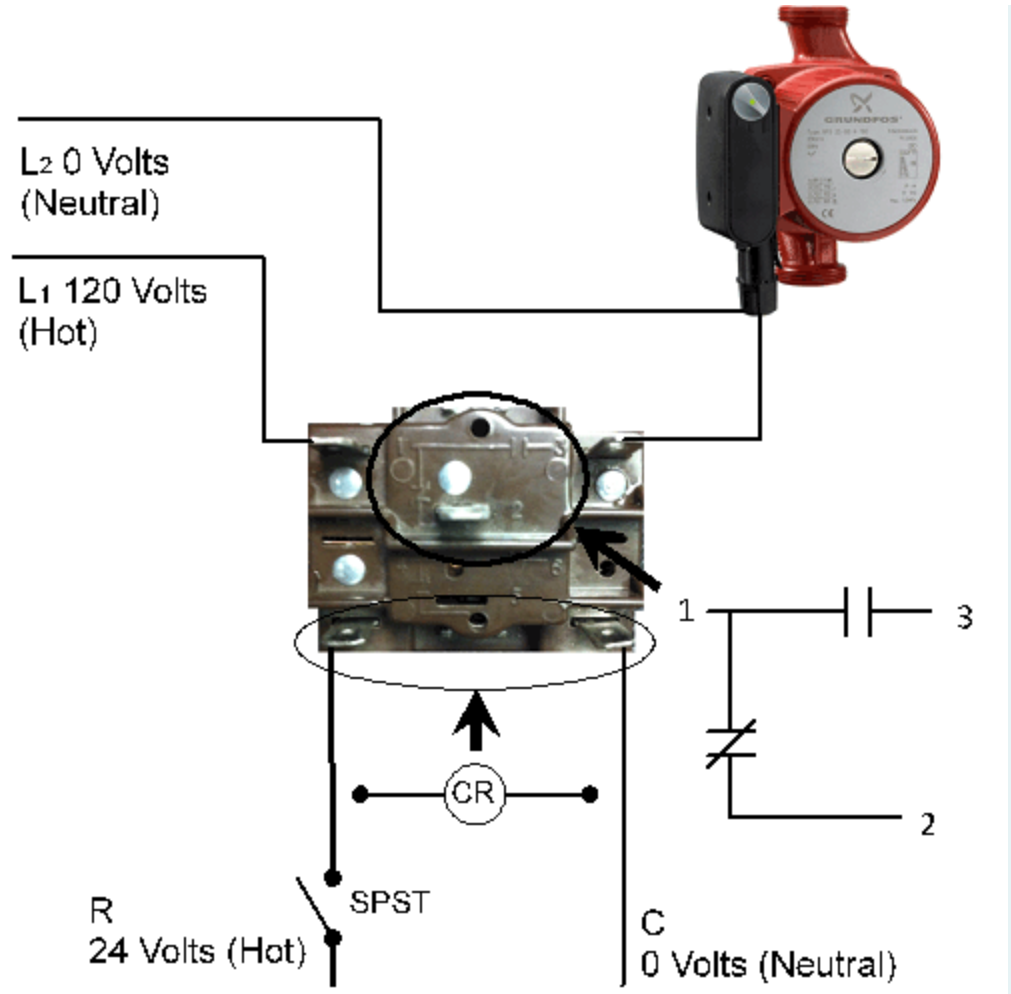

Select one:

Yes

No

Feedback

Your answer is correct.

Yes, the SPST switch will energize the relay coil and close the normally open contacts

The correct answer is: Yes

Question **25**

Incorrect

Mark 0.00 out of 1.00

Flag question

Question text

Referring to the illustration below, which contacts will be controlled by relay coil 2R?

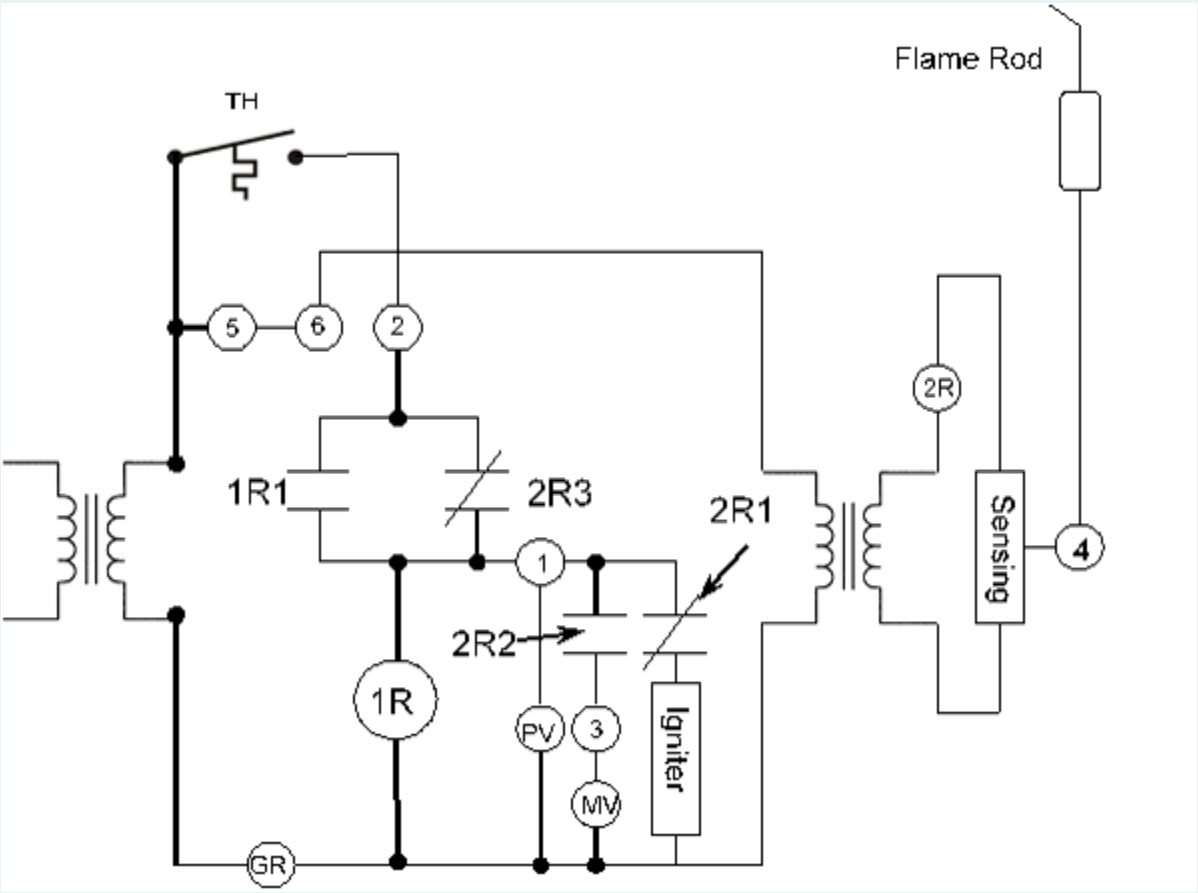

Select one or more:

a.
2R1

b.
2R3

c.
1R

d.
2R2

e.
1R1

Feedback

Your answer is incorrect.

2R1, 2R2 and 2R3

When the relay coil 2R is energized; 2R1 opens, 2R2 closes and 2R3 opens.

The correct answers are: 2R1, 2R2, 2R3

Question **26**
Correct
Mark 1.00 out of 1.00

Flag question

Question text

Why would a contactor be used rather than a standard relay?

Select one:

a.
Appliances over 250MBH

b.
Higher Amperage

c.
Lower Amperage

d.
Lower Voltage

e.
Higher Voltage

Feedback

Your answer is correct.

The correct answer is: Higher Amperage

Question **27**
Correct
Mark 1.00 out of 1.00

Flag question

Question text

Why do vent dampers also include an end switch?

Select one:

a.
To prove the damper is fully open prior to igniting the burners

b.
To allow for a 30 second time delay.

c.
Signals the profile plates and allows time for them to adjust before the fan turns on.

d.
To prove the zone valve is fully open before the pump turns on.

Feedback

Your answer is correct.

The correct answer is: To prove the damper is fully open prior to igniting the burners

Question **28**
Correct
Mark 1.00 out of 1.00

Flag question

Question text

What is the most common voltage required for zone valve motors ?

Select one:

a.
20-30 millivolts

b.
250-750 millivolts

c.
240 volt

d.
24 volt

Feedback

Your answer is correct.

The correct answer is: 24 volt

Question **29**
Correct
Mark 1.00 out of 1.00

Flag question

Question text

When the zone valve motor is energized does current immediately flow through the end switch?

Select one:

Yes

No

Feedback

Your answer is correct.

No, the valve must be fully open to close the end switch.

The correct answer is: No

Question **30**
Correct
Mark 1.00 out of 1.00

Flag question

Question text

What is the purpose of a transformer?

Select one:

a.
Decrease AC voltage

b.
Transform AC voltage to DC voltage

c.
Increase AC voltage

d.
Increase or Decrease AC voltage

Feedback

Your answer is correct.

The correct answer is: Increase or Decrease AC voltage

Question **31**
Incorrect
Mark 0.00 out of 1.00

Flag question

Question text

In a step down transformer the primary side will have the same windings when compared to the secondary side.

Feedback

Your answer is incorrect.

The correct answer is:
In a step down transformer the primary side will have [more] windings when compared to the secondary side.

Question **32**
Correct
Mark 1.00 out of 1.00

Flag question

Question text

What term is used to describe the process of generating electricity in the secondary winding's of a transformer?

Select one:

a.
Phase

b.
Conduction

c.
Induction

d.
Frequency

Feedback

Your answer is correct.

The correct answer is: Induction

Question **33**
Incorrect
Mark 0.00 out of 1.00

Flag question

Question text

A transformer would have multiple tappings for different frequencies or to create a number of different amperages .

Feedback

Your answer is incorrect.

The correct answer is:
A transformer would have multiple tappings for different [voltages] or to create a number of different [voltages].

Question **34**
Incorrect
Mark 0.00 out of 1.00

Flag question

Question text

What would be the VA rating of a 120/24 volt transformer that is able to deliver 1.667 Amps?

VA = Answer 4

Feedback

VA (W) = V × A

VA = 24 V × 1.667 A

VA = 40

The correct answer is: 40.008

Question **35**

Incorrect

Mark 0.00 out of 1.00

Flag question

Question text

How many 24 volt zone valves could be operated from a 120/24 volt transformer with a 40 VA rating if each zone valve required 0.32 Amps?

Answer: .55

Feedback

A=VAVA=VAV

A=40VA24VA=40VA24V

A=1.667A=1.667

1.667A ÷ 0.32A = 5.21

Therefore you could operate **5** 24volt zone valves.

The correct answer is: 5

Question **36**

Incorrect

Mark 0.00 out of 1.00

Flag question

Question text

Referring to the illustration below, this electrical symbol represents which one of the following electrical components?

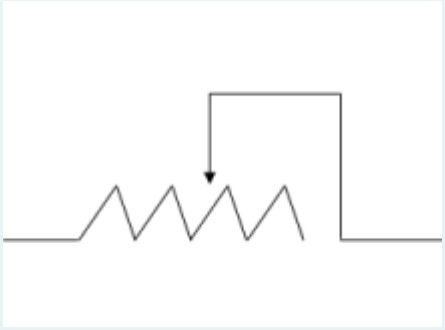

Select one:

a.
A relay coil

b.
An adjustable capacitor

c.
A variable resistor

d.
A tapped transformer

Feedback

Your answer is incorrect.

The correct answer is: A variable resistor

Question **37**
Correct
Mark 1.00 out of 1.00

Flag question

Question text

Which of the following is not a consideration when installing a new thermostat for a furnace?

Select one:

a.
The Btuh rating of the thermostat must match the Btuh rating of the furnace.

b.
The voltage designation of the thermostat must match the voltage of the control circuit.

c.
The thermostat must be installed in a location to ensure that it is monitoring the ambient house temperature.

d.
The amperage designation on the heat anticipator must be adjusted to the rating of the gas valve.

Feedback

Your answer is correct.

The correct answer is: The Btuh rating of the thermostat must match the Btuh rating of the furnace.

Question **38**
Incorrect
Mark 0.00 out of 1.00

Flag question

Question text

The furnace fan control contacts open when the circulating air :

Select one:

a.
cools down

b.
warms up

c.
starts flowing

d.

stops flowing

Feedback

Your answer is incorrect.

The correct answer is: cools down

Question **39**
Incorrect
Mark 0.00 out of 1.00

Flag question

Question text

Which of the following would be classified as a normally “open” switch?

Select one:

a.
High limit switch

b.
Flame roll-out switch

c.
Automatic fan switch

d.
High limit pressuretrol

Feedback

Your answer is incorrect.

The correct answer is: Automatic fan switch

Question **40**
Correct
Mark 1.00 out of 1.00

Flag question

Question text

The electrical symbol illustrated below represents which one of the following electrical components?

Select one:

a.
A circulating pump

b.
A relay coil

c.
A variable resistor

d.
A centrifugal switch

Feedback

Your answer is correct.

The correct answer is: A relay coil

Question **41**

Incorrect

Mark 0.00 out of 1.00

Flag question

Question text

What is the typical fan-off setpoint for a combination high-limit/fan control?

Select one:

a.
150 °F (65 °C)

b.
200 °F (93 °C)

c.
20 °F (9°C) above the fan-on setpoint

d.
20 °F (9°C) above the thermostat setpoint

Feedback

Your answer is incorrect.

The correct answer is: 20 °F (9°C) above the thermostat setpoint

Question **42**
Correct
Mark 1.00 out of 1.00

Flag question

Question text

What is the typical setting for a high limit aquastat ?

Select one:

a.
180 F

b.
250 F

c.
200 F

d.
140 F

Feedback

Your answer is correct.

The correct answer is: 200 F

Question **43**
Incorrect
Mark 0.00 out of 1.00

Flag question

Question text

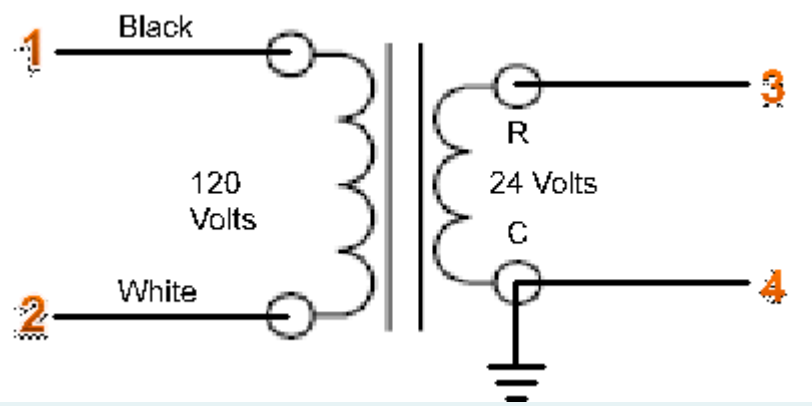

#1 and #3 = Answer 24

Volts

Question **44**
Correct
Mark 1.00 out of 1.00

Flag question

Question text

#1 and #4 = Answer 120

Volts

Question **45**
Incorrect
Mark 0.00 out of 1.00

Flag question

Question text

#2 and #4 = Answer 96

Volts

What are the two components necessary for combustion safety circuit utilizing a standing pilot?

Select one:

a.
Thermopile

b.
High limit and fan switch

c.
Gas valve

d.
Thermocouple and a safety shutoff valve

Feedback

Your answer is correct.

The correct answer is: Thermocouple and a safety shutoff valve

Question **2**
Correct
Mark 1.00 out of 1.00

Flag question

Question text

In the combustion safety circuit what is the purpose of a thermocouple?

Select one:

a.
Power supply

b.

Heat generator

c.
Limit switch

d.
POC Detector

Feedback

Your answer is correct.

The correct answer is: Power supply

Question **3**
Correct
Mark 1.00 out of 1.00

Flag question

Question text

Approximately how many volts will a thermocouple generate?

Select one:

a.
40 – 50 millivolts

b.
20 – 30 volts

c.
20 – 30 millivolts

d.
25 – 45 volts

Feedback

Your answer is correct.

The correct answer is: 20 – 30 millivolts

Question **4**
Correct
Mark 1.00 out of 1.00

Flag question

Question text

A thermocouple is made of two dissimilar metals joined together at one end, what is the term used for that connection?

Select one:

a.
Cold junction

b.
Bimetal strip

c.
Hot junction

d.
Magnetic field

Feedback

Your answer is correct.

The correct answer is: Hot junction

Question **5**
Correct
Mark 1.00 out of 1.00

Flag question

Question text

In a thermocouple, the temperature difference between the hot junction and the cold junction produces the greatest amount of voltage, how much of the thermocouple's hot junction should be heated?

Select one:

a.
1/8" – 3/8"

b.
1/2” – 3/4”

c.
5/8” – 1”

d.
3/8” – 1/2”

Feedback

Your answer is correct.

The correct answer is: 3/8” – 1/2”

Question **6**
Incorrect
Mark 0.00 out of 1.00

Flag question

Question text

According to the CSA B149.3 code, thermocouples are limited to combustion safety circuits that have standing pilots, and to what input BTU rating?

Select one:

a.
400 000 Btu

b.
1 000 000 Btu

c.
500 000 Btu

d.
1 200 000 Btu

Feedback

Your answer is incorrect.

The correct answer is: 400 000 Btu

Question **7**

Correct
Mark 1.00 out of 1.00

Flag question

Question text

Thermocouples used in low volume appliances in conjunction with a gas that has a specific gravity greater than 1.0, shall have a maximum flame failure response time of?

Select one:

a.
40 seconds

b.
90 seconds

c.
120 seconds

d.
20 seconds

Feedback

Your answer is correct.

The correct answer is: 20 seconds

Question **8**
Correct
Mark 1.00 out of 1.00

Flag question

Question text

Another type of device that operates similarly to a thermocouple is known as?

Select one:

a.
Pilot Flame

b.
DC Generator

c.
Thermocouple

d.
Pilot Generator

Feedback

Your answer is correct.

The correct answer is: Pilot Generator

Question **9**
Correct
Mark 1.00 out of 1.00

Flag question

Question text

Thermopiles create enough voltage to supply power to the combustion safety circuit as well as?

Select one:

a.
The Transformer

b.
The Limiting Devices

c.
The Gas Valve

d.
The Control Circuit

Feedback

Your answer is correct.

The correct answer is: The Control Circuit

Question **10**
Correct
Mark 1.00 out of 1.00

Flag question

Question text

In 100% safe systems, the valve shuts off the gas to both the main burner and the pilot burner. For non-100% (or 80%) safe systems the valve shuts off the gas to what device only.

Select one:

a.
Pilot Burner

b.
Gas Valve

c.
Main Burner

d.
The Meter

Feedback

Your answer is correct.

The correct answer is: Main Burner

Question **11**
Incorrect
Mark 0.00 out of 1.00

Flag question

Question text

An appliance with a flame sensor has an input greater than 120 KW what is the maximum FFRT (Flame Failure Response Time)?

Select one:

a.
4 seconds

b.
12 seconds

c.
90 seconds

d.
20 seconds

Feedback

Your answer is incorrect.

The correct answer is: 4 seconds

Question **12**
Correct
Mark 1.00 out of 1.00

Flag question

Question text

What is the most common flame sensing device for appliances under 1,000,000 Btu?

Select one:

a.
Thermostat

b.
Thermometer

c.
Flame Rod

d.
Pyrometer

Feedback

Your answer is correct.

The correct answer is: Flame Rod

Question **13**
Correct

Mark 1.00 out of 1.00

Flag question

Question text

Flame rods are typically made from what material?

Select one:

a.
Babbit alloys

b.
Brass alloys

c.
Kanthol and Globar alloys

d.
Kryptonite alloys

Feedback

Your answer is correct.

The correct answer is: Kanthol and Globar alloys

Question **14**
Incorrect
Mark 0.00 out of 1.00

Flag question

Question text

What is the current that is generally conducted through a flame?

Select one:

a.
2 - 4 kA

b.
2 – 4 A

c.
2 – 4 µA

d.
2 – 4 mA

Feedback

Your answer is incorrect.

The correct answer is: 2 – 4 µA

Question **15**
Incorrect
Mark 0.00 out of 1.00

Flag question

Question text

Optical flame detectors are divided into three groups, the detection type that scans the visible light spectrum is known as?

Select one:

a.
Photo Cells

b.
Gas Filled Detection Tubes

c.
Light Detection Amalgam

d.
Lead Sulfide Cells

Feedback

Your answer is incorrect.

The correct answer is: Photo Cells

Question **16**
Correct
Mark 1.00 out of 1.00

Flag question

Question text

UV flame detectors respond to UV sources in a flame. However, it is possible for the detector to respond to other sources of UV radiation such as? (select all that apply)

Select one or more:

a.
Incandescent lights

b.
Halogen Lights

c.
Hot Refractory

d.
Grinding Sparks

e.
Flash Lights

f.
Welding Arcs

g.
Spark Ignition

Feedback

Your answer is correct.

The correct answers are: Hot Refractory, Spark Ignition, Welding Arcs, Halogen Lights

Control circuits can be broken down into three categories, devices in that circuit are known as operating control, safety controls, and _____?

Select one:

a.
Actuators

b.
Limits

c.
Pumps

d.
Switches

Feedback

Your answer is correct.

The correct answer is: Actuators

Question **2**
Correct
Mark 1.00 out of 1.00

Flag question

Question text

Operating controls have adjustable set points and some type of sensing element used to sense? (select all that apply)

Select one or more:

a.
Specific weight

b.
Color

c.
Temperature

d.
Density

e.
Pressure

Feedback

Your answer is correct.

The correct answers are: Temperature, Pressure

Question **3**
Correct
Mark 1.00 out of 1.00

Flag question

Question text

Safety switches are designed to shut off what device if there is an unsafe condition present?

Select one:

a.
The Appliance Power Supply

b.
The Fan or Pump

c.
The Gas Valve

d.
The Control Board

Feedback

Your answer is correct.

The correct answer is: The Gas Valve

Question **4**
Incorrect
Mark 0.00 out of 1.00

Flag question

Question text

In a gas dryer which device would be considered and safety limit?

Select one:

a.
Door Switch

b.
Gas Valve

c.
Thermostat

d.
Aquastat

Feedback

Your answer is incorrect.

The correct answer is: Door Switch

Question **5**
Incorrect
Mark 0.00 out of 1.00

Flag question

Question text

For an intermittent pilot system, if the control module sensed an overheating condition and the high limit opened its contacts, what would be de-energized?

Select one:

a.
The Gas Valve

b.
The Control board

c.
The Thermostat

d.
The Transformer

Feedback

Your answer is incorrect.

The correct answer is: The Transformer

Question **6**
Correct
Mark 1.00 out of 1.00

Flag question

Question text

Control modules with electronic ignition were designed to facilitate the operation of appliances where access was difficult, or were frequent pilot outages would occur because of _____?

Select one:

a.
Wind

b.
Sun

c.
Clouds

d.
Rain

Feedback

Your answer is correct.

The correct answer is: Wind

Question **7**
Correct
Mark 1.00 out of 1.00

Flag question

Question text

On most appliances that use a DSI, the ignition module will go into lock-out mode after _____ attempts to detect a flame.

Select one:

a.
5

b.
2

c.
3

d.
4

Feedback

Your answer is correct.

The correct answer is: 3

Question **8**
Correct
Mark 1.00 out of 1.00

Flag question

Question text

A HSI has an element that is made from what material?

Select one:

a.
Carbon Tetrasulphate

b.
Silicon Carbide

c.
Tetrasodium Pyrophosphate

d.
Polychloroprene

Feedback

Your answer is correct.

The correct answer is: Silicon Carbide

Question **9**
Correct
Mark 1.00 out of 1.00

Flag question

Question text

What is the most common reason for failure of an HSI's?

Select one:

a.
It is improperly connected.

b.
It is covered in soot.

c.
It is wet.

d.
It is cracked.

Feedback

Your answer is correct.

The correct answer is: It is cracked.

In a forced air furnace the fan's operation can be controlled by what? (select all that apply)

Select one or more:

a.
Flow sensing Switches

b.
Timer actuated switches

c.
Temperature-actuated switches

d.
Motor rotation sensors

e.
Pressure sensing Switches

Feedback

Your answer is correct.

The correct answers are: Temperature-actuated switches, Timer actuated switches

Question **2**
Correct
Mark 1.00 out of 1.00

Flag question

Question text

The difference in temperature between the fan-on and fan-off setting is called?

Select one:

a.
The fan sensor

b.
The vent differential

c.
The controller

d.
The fan control differential

Feedback

Your answer is correct.

The correct answer is: The fan control differential

Question **3**
Correct
Mark 1.00 out of 1.00

Flag question

Question text

When replacing temperature-activated switches it is recommended that the switches be reinstalled in what location?

Select one:

a.
Near the outlet of the fan

b.
Near the heat exchanger

c.
Near the gas valve

d.
Near the bottom of the unit

Feedback

Your answer is correct.

The correct answer is: Near the heat exchanger

Question **4**
Correct
Mark 1.00 out of 1.00

Flag question

Question text

Using a timer actuated heat on and heat off fan switch, delays can be adjusted, it is recommended that these switches be set initially to what timing?

Select one:

a.
30 sec Heat On, 60 Sec Heat Off

b.
Factory Setting

c.
45 sec Heat On, 60 Sec Heat Off

d.
15 sec Heat On, 90 Sec Heat Off

Feedback

Your answer is correct.

The correct answer is: Factory Setting

Question **5**
Correct
Mark 1.00 out of 1.00

Flag question

Question text

What are three classifications of furnaces?

Select one or more:

a.
High Boy

b.
Low flow

c.
Horizontal

d.
Counter-flow

e.
CFM

f.
Up draft

g.
Low Boy

h.
Vertical

Feedback

Your answer is correct.

The correct answers are: High Boy, Low Boy, Horizontal

Question **6**
Correct
Mark 1.00 out of 1.00

Flag question

Question text

Furnaces that utilize mono-port inshot burners can be installed in what orientation?

Select one:

a.
Any of the options

b.
Up flow

c.
Down flow

d.
Horizontal right

e.
Horizontal left

Feedback

Your answer is correct.

The correct answer is: Any of the options

Question **7**
Correct

Mark 1.00 out of 1.00

Flag question

Question text

The difference in temperature between the air entering the blower chamber from the cold air return plenum and the hot air leaving the supply plenum is the definition of _____?

Select one:

a.
Delta T

b.
Design Temperature

c.
Temperature Rise

d.
Temperature Difference

Feedback

Your answer is correct.

The correct answer is: Temperature Rise

Question **8**

Correct

Mark 1.00 out of 1.00

Flag question

Question text

To determine temperature rise in a furnace it is recommended that a hole be drilled in the supply and return plenums to accommodate a thermometer.

Select one:

a.
True

b.
False

Feedback

Your answer is correct.

The correct answer is: True

Question **9**
Incorrect
Mark 0.00 out of 1.00

Flag question

Question text

Temperature rise is controlled by the fan speed, to reduce the temperature rise the fan speed must be _____?

Select one:

a.
Decreased

b.
Increased

c.
Factory set

d.
No adjustment is possible

Feedback

Your answer is incorrect.

The correct answer is: Increased

Question **10**
Correct
Mark 1.00 out of 1.00

Flag question

Question text

Fan motors are of two types' _____ and _____?

Select one or more:

a.
Geared

b.
Belt Drive

c.
Indirect Drive

d.
Direct Drive

Feedback

Your answer is correct.

The correct answers are: Direct Drive, Belt Drive

Question **11**
Incorrect
Mark 0.00 out of 1.00

Flag question

Question text

Wiring for a multi speed fan motor in high speed is accomplished in general by connecting the _____ wire.

Select one:

a.
Brown

b.
Red

c.
Black

d.
White

Feedback

Your answer is incorrect.

The correct answer is: Black

Question **12**

Correct

Mark 1.00 out of 1.00

Flag question

Question text

ESP is the abbreviation for?

Select one:

a.
Extra Sensory Perception

b.
Excess to Supply Plenum

c.
Extra Speeds Possible

d.
External Static Pressure

Feedback

Your answer is correct.

The correct answer is: External Static Pressure

elect the correct order for the sequence of operation for a furnace utilizing a standing pilot:

2 - The automatic gas valve opens

4 - When the call for heat is satisfied, the thermostat opens its contacts de-energizing the gas valve.

1 - The thermostat calls for heat

5 - Once the heat exchanger cools to the fan-off setpoint, the fan motor is de-energized

3 - When the heat exchanger reaches the fan-on setpoint the fan motor is energized

Feedback

Your answer is correct.

The correct answer is:
Select the correct order for the sequence of operation for a furnace utilizing a standing pilot:

[2] - The automatic gas valve opens

[4] - When the call for heat is satisfied, the thermostat opens its contacts de-energizing the gas valve.

[1] - The thermostat calls for heat

[5] - Once the heat exchanger cools to the fan-off setpoint, the fan motor is de-energized

[3] - When the heat exchanger reaches the fan-on setpoint the fan motor is energized

Question **2**
Correct
Mark 1.00 out of 1.00

Flag question

Question text

What is the primary purpose of a combustion safety circuit?

Select one:

a.
To detect the presence or absence of a flame

b.
To ensure proper gas flow to the burner

c.
To ensure proper air flow to the combustion chamber

d.
To check for complete or incomplete combustion

Feedback

Your answer is correct.

The correct answer is: To detect the presence or absence of a flame

Question **3**

Correct

Mark 1.00 out of 1.00

Flag question

Question text

How does a thermocouple generate electricity?

Two dissimilar metals are joined at one end called the hot junction. When heat is applied electricity is created.

Feedback

Your answer is correct.

The correct answer is:
How does a thermocouple generate electricity?

Two [dissimilar] metals are joined at one end called the [hot] junction. When heat is applied electricity is created.

Question **4**

Partially correct

Mark 0.50 out of 1.00

Flag question

Question text

Select all that apply in reference to a 100% and an 80% combustion safety circuit:

Select one or more:

☑ a.
A 100% safe system cuts off the supply to both the pilot and the main burner

☐ b.
An 80% safe system cuts off the supply to both the pilot and the main burner

c.
A 100% safe system cuts off the supply to the pilot but not the main burner

d.
An 80% safe system cuts off the supply to the main burner but not the pilot

Feedback

Your answer is partially correct.

You have correctly selected 1.
100% safe combustion safety circuit.

During pilot outage the gas supply is terminated to both the main burner and the pilot burner.

80% safe combustion safety circuit.

During pilot outage the gas supply is terminated to the main burner only.

The correct answers are: A 100% safe system cuts off the supply to both the pilot and the main burner, An 80% safe system cuts off the supply to the main burner but not the pilot

Question **5**
Correct
Mark 1.00 out of 1.00

Flag question

Question text

What is the maximum flame failure response time (FFRT) in seconds for an appliance with an input of 400,000 Btuh (120 kW) or less, fired on natural gas?

Select one:

a.
30

b.
90

c.
60

d.
120

Feedback

Your answer is correct.

The correct answer is: 90

Question **6**

Correct

Mark 1.00 out of 1.00

Flag question

Question text

What is the maximum FFRT in seconds for an appliance with an input greater than 400,000 Btuh (120 kW) ?

Select one:

a.
6

b.
4

c.
8

d.
30

e.
60

f.
5

Feedback

Your answer is correct.

The correct answer is: 4

Question **7**

Correct

Mark 1.00 out of 1.00

Flag question

Question text

Why would a thermopile be used rather than a thermocouple ?

Select one:

a.
To provide a higher level of protection.

b.
To provide power to the damper motor as well as the combustion safety circuit.

c.
To not only power the combustion safety circuit but also the control circuit

d.
When used in conjunction with a hot surface igniter.

Feedback

Your answer is correct.

The correct answer is: To not only power the combustion safety circuit but also the control circuit

Question **8**
Incorrect
Mark 0.00 out of 1.00

Flag question

Question text

Which flame safeguards are used for appliances that have electronic ignition systems?

Select one or more:

a.
HSI

b.
Thermocouples

c.
Flame rods

d.
Thermopiles

e.
DSI

f.
Optical detectors

Feedback

Your answer is incorrect.

The correct answers are: Flame rods, Optical detectors

Question **9**
Incorrect
Mark 0.00 out of 1.00

Flag question

Question text

Which is the most common flame safeguard encountered in appliances with inputs less than 1,000 MBH (293 kW) that have electronic ignition systems?

Select one:

a.
Thermocouples

b.
Optical detectors

c.
Flame rods

d.
Thermopiles

Feedback

Your answer is incorrect.

The correct answer is: Flame rods

Question **10**
Correct
Mark 1.00 out of 1.00

Flag question

Question text

Flame rods are typically made of which materials?

Select one or more:

- [ ] a. Refractory
- [ ] b. Sodium bicarbonate
- [ ] c. Silicon iron
- [x] d. Globar
- [ ] e. Silver
- [x] f. Kanthol

Feedback

Your answer is correct.

The correct answers are: Kanthol, Globar

Question **11**
Correct
Mark 1.00 out of 1.00

Flag question

Question text

What is the anticipated current through a flame rod ?

Select one:

a.
1 - 2 micro-amps

b.
4 - 6 micro-amps

c.
2 –4 micro-amps

d.
6 - 8 micro-amps

Feedback

Your answer is correct.

The correct answer is: 2 –4 micro-amps

Question **12**
Partially correct
Mark 0.33 out of 1.00

Flag question

Question text

What are the three types of optical flame detectors used on gas equipment and which part of the flame spectrum do they sense?

Select one or more:

a.
Photocells - Visible light

b.
Lead Sulphide (PbS) Cells - Ultraviolet light

c.
Lead Sulphide (PbS) Cells - Infrared light

d.

Photocells - Ultraviolet light

e.
UV Detectors - Ultraviolet light

Feedback

Your answer is partially correct.

You have correctly selected 1.
The correct answers are: UV Detectors - Ultraviolet light, Photocells - Visible light, Lead Sulphide (PbS) Cells - Infrared light

Question **13**
Correct
Mark 1.00 out of 1.00

Flag question

Question text

What is the minimum difference in area between the grounding electrode and the flame rod in order for a flame rectification system to function?

Select one:

a.
2 : 1

b.
4 **:** 1

c.
10 : 1

d.
6 : 1

Feedback

Your answer is correct.

The correct answer is: 4 **:** 1

Question **14**
Incorrect
Mark 0.00 out of 1.00

Flag question

Question text

What is meant by the term "Flame Flicker Frequency"?

Select one:

a.
A small amount of electricity produced by the flames movement.

b.
The cycle frequency of small explosions of fuel and oxygen.

c.
A flames characteristic that mimics sound frequency.

d.
A way of measuring the amount of times an appliance turns on and off in one 24 hour period.

Feedback

Your answer is incorrect.

The correct answer is: The cycle frequency of small explosions of fuel and oxygen.

Question **15**
Correct
Mark 1.00 out of 1.00

Flag question

Question text

Which part of a gas flame emits the highest percentage of ultraviolet radiation?

Select one:

a.
Last 1/3 of the flame

b.

Second 1/3 of the flame

c.
The entire flame

d.
First 1/3 of the flame

Feedback

Your answer is correct.

The correct answer is: First 1/3 of the flame

Question **16**
Correct
Mark 1.00 out of 1.00

Flag question

Question text

Please match the following statements with the proper name.

Operating controls have an adjustable setpoint and contain a sensing element and a switch that responds to changes in the medium being sensed and makes or breaks the control circuit.

Limit controls shutoff the gas valve if continued operation would cause an unsafe condition.

Feedback

Your answer is correct.

The correct answer is:
Please match the following statements with the proper name.

[Operating] controls have an adjustable setpoint and contain a sensing element and a switch that responds to changes in the medium being sensed and makes or breaks the control circuit.

[Limit] controls shutoff the gas valve if continued operation would cause an unsafe condition.

Question **17**
Incorrect
Mark 0.00 out of 1.00

Flag question

Question text

Referring to the diagram below, identify the operating control and the limit control.

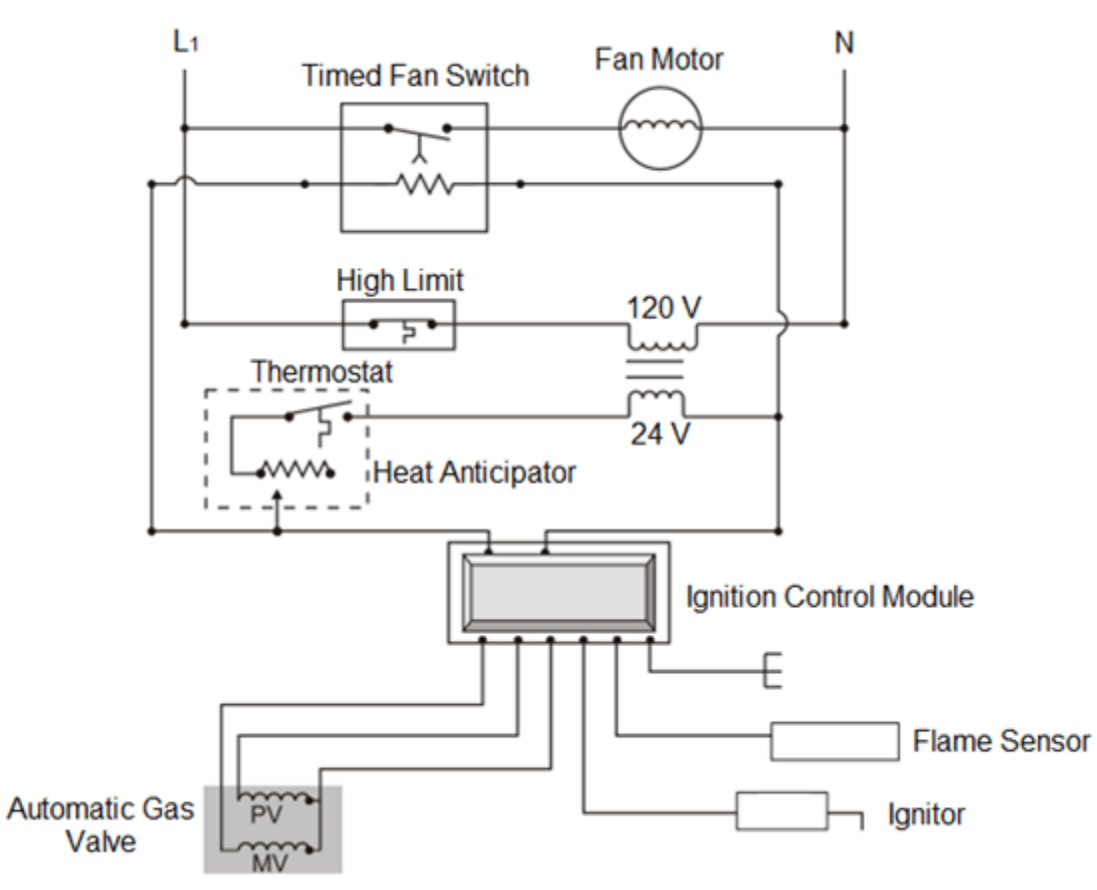

The High Limit is the operating control.

The Automatic Gas Valve is the limit control.

Feedback

Your answer is incorrect.

The correct answer is:
Referring to the diagram below, identify the operating control and the limit control.

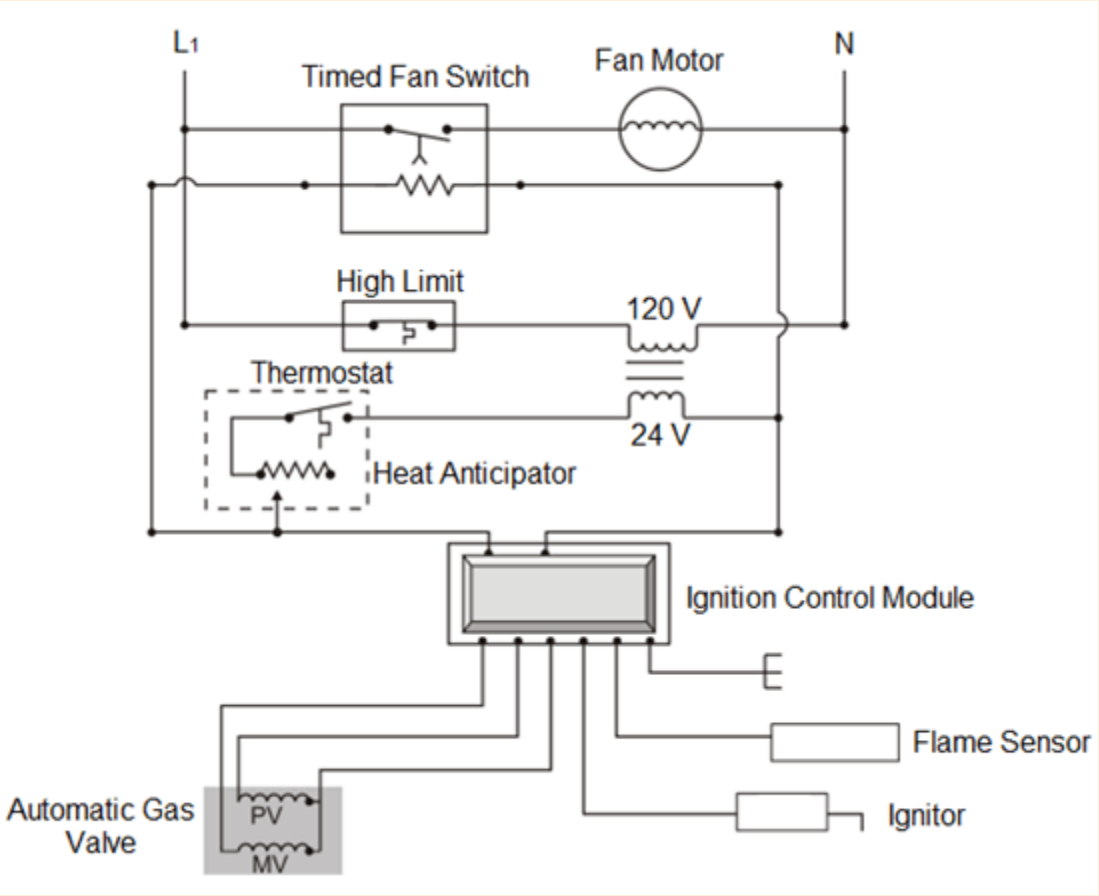

The [Thermostat] is the operating control.

The [High Limit] is the limit control.

Question **18**
Partially correct
Mark 0.17 out of 1.00

Flag question

Question text

List the sequence of operation for the diagram below:

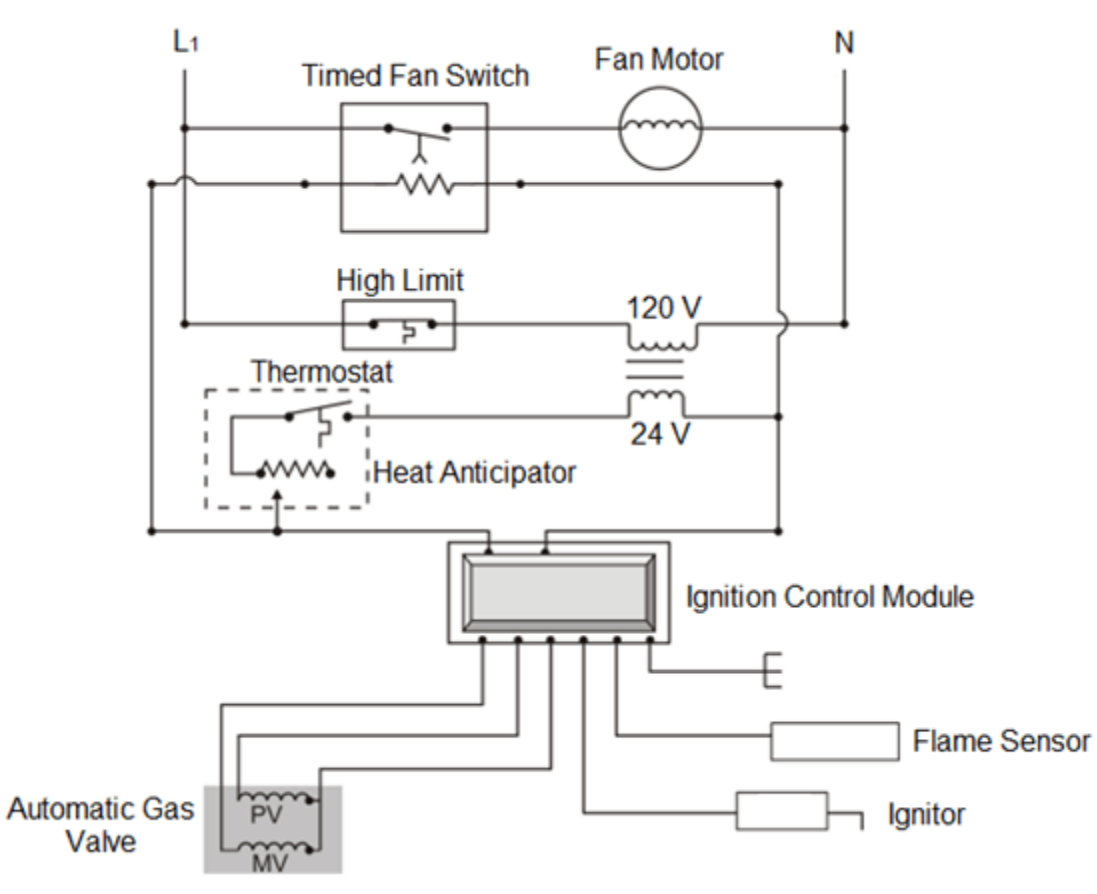

1.

24 V travels through the heat anticipator and powers the ignition control module and the fan switch time delay relay coil.

2.

The thermostat calls for heat

3.

The flame sensor detects the pilot flame

4.

The main valve is energized and the main burner is ignited by the pilot flame

5.

The ignition control module powers the igniter and pilot valve

6.

When the time delay relay completes its cycle the fan motor is energized

Feedback

Your answer is partially correct.

You have correctly selected 1.
The correct answer is:
List the sequence of operation for the diagram below:

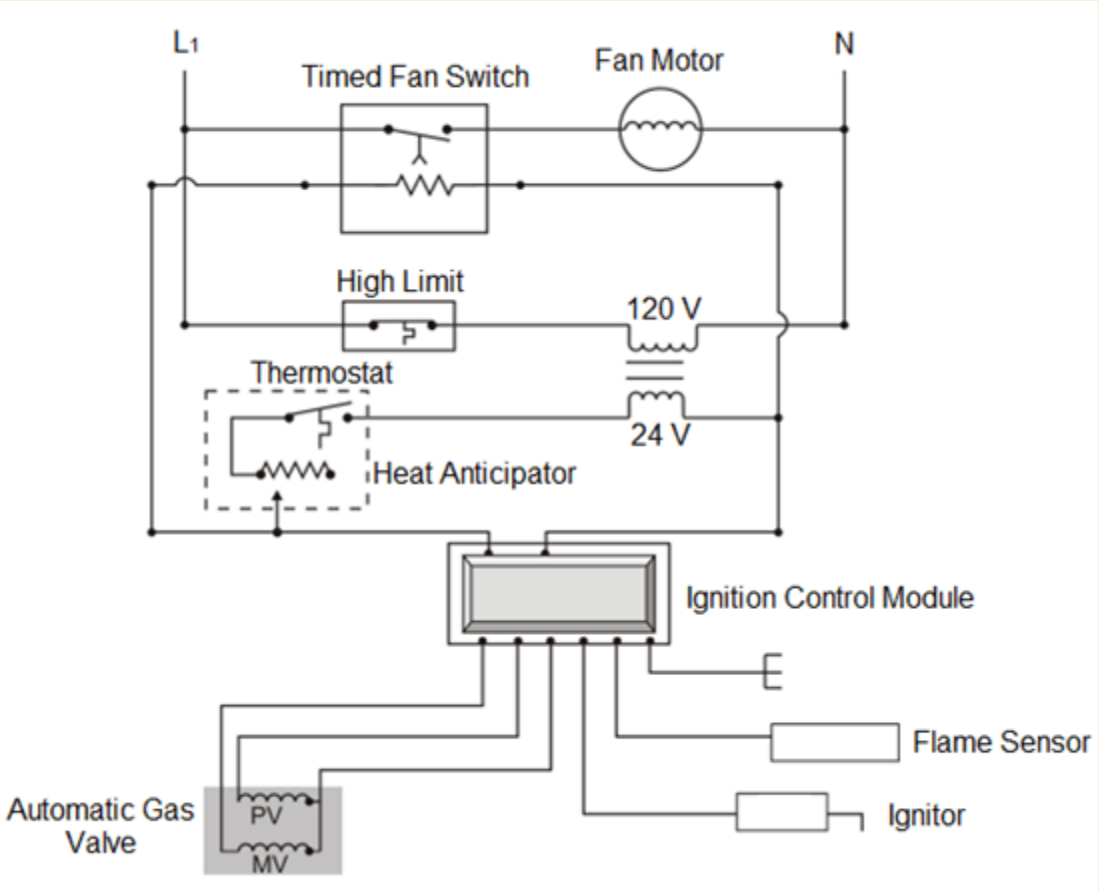

1. [The thermostat calls for heat]

2. [24 V travels through the heat anticipator and powers the ignition control module and the fan switch time delay relay coil.]

3. [The ignition control module powers the igniter and pilot valve]

4. [The flame sensor detects the pilot flame]

5. [The main valve is energized and the main burner is ignited by the pilot flame]

6. [When the time delay relay completes its cycle the fan motor is energized]

Question **19**
Partially correct
Mark 0.60 out of 1.00

Flag question

Question text

List the sequence of operation for the diagram below:

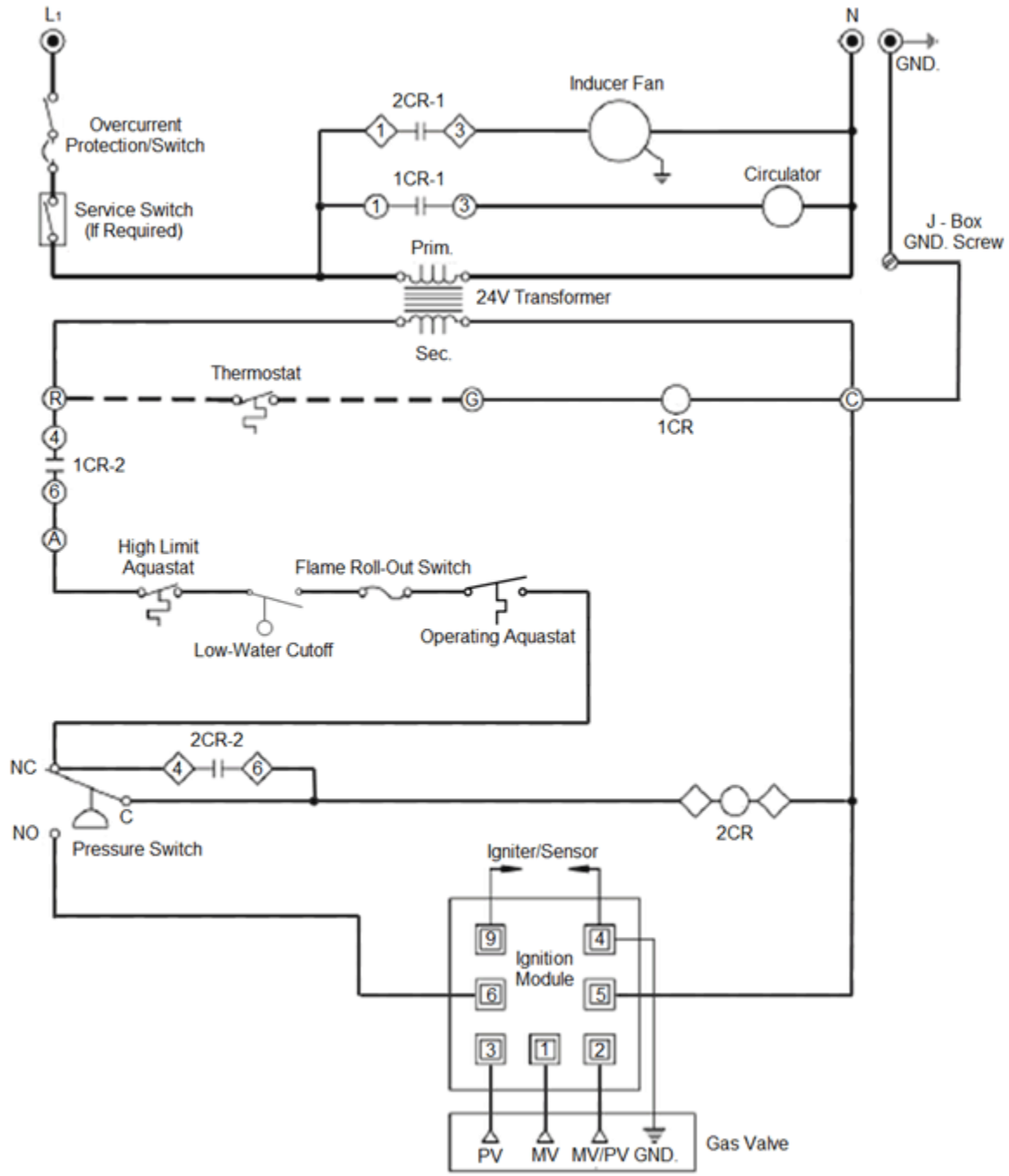

2 - When the thermostat closes its contacts, relay coil 1CR is energized

4 - Provided that the high limit aquastat, low water cut-off and flame rollout switches are closed, the operating aquastat will close its contacts on a drop in water temperature allowing current to flow through the pressure switch to relay coil 2CR.

1 - 1CR-1 contacts close energizing the circulator.

3 - 1CR-2 contacts close energizing the control circuit.

5 - 2CR-1 contacts close energizing the inducer fan.

Feedback

Your answer is partially correct.

You have correctly selected 3.
The correct answer is:
List the sequence of operation for the diagram below:

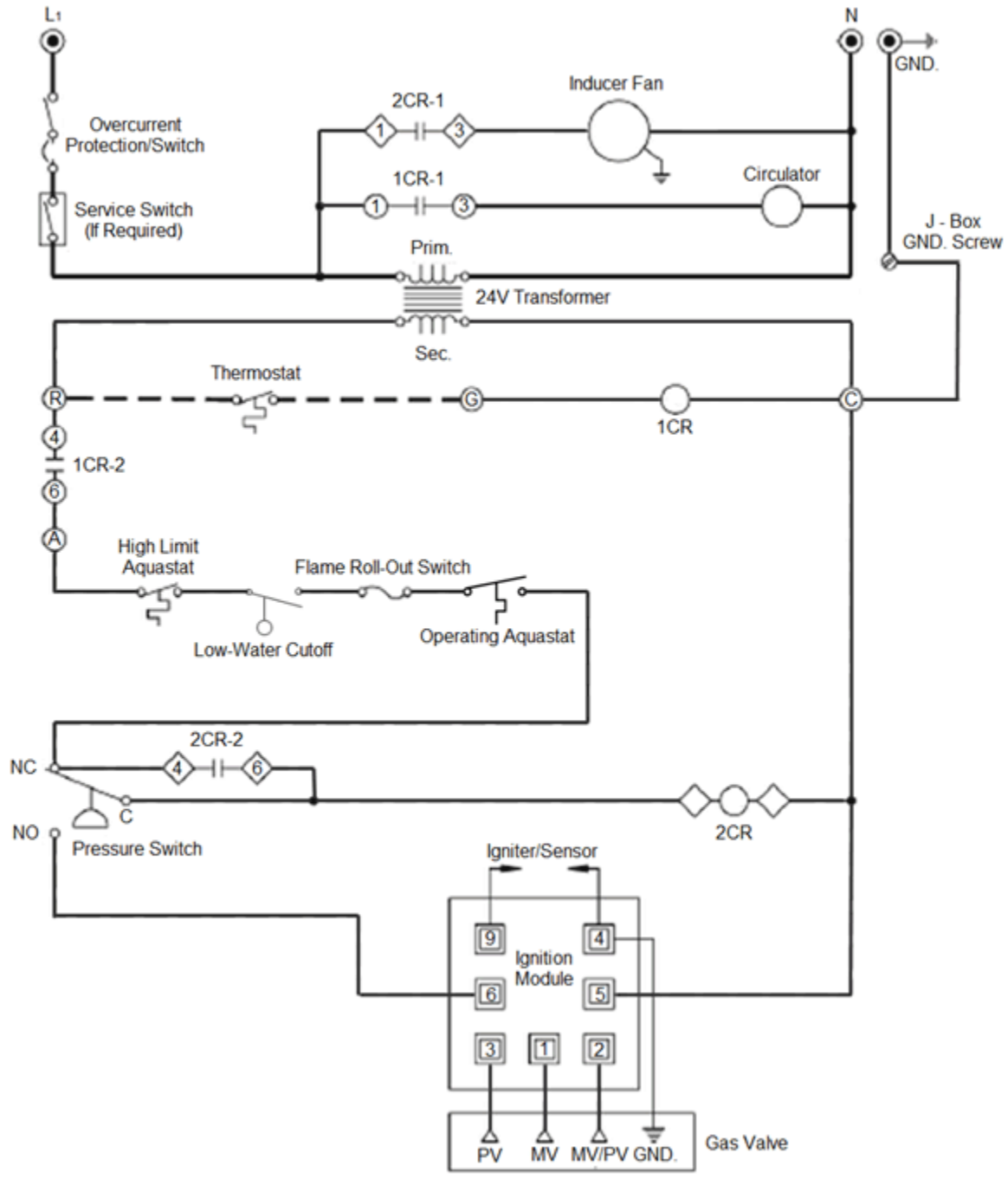

[1] - When the thermostat closes its contacts, relay coil 1CR is energized

[4] - Provided that the high limit aquastat, low water cut-off and flame rollout switches are closed, the operating aquastat will close its contacts on a drop in water temperature allowing current to flow through the pressure switch to relay coil 2CR.

[2] - 1CR-1 contacts close energizing the circulator.

[3] - 1CR-2 contacts close energizing the control circuit.

[5] - 2CR-1 contacts close energizing the inducer fan.

Question **20**
Partially correct
Mark 0.50 out of 1.00

Flag question

Question text

Referring to the figure, identify the limit controls:

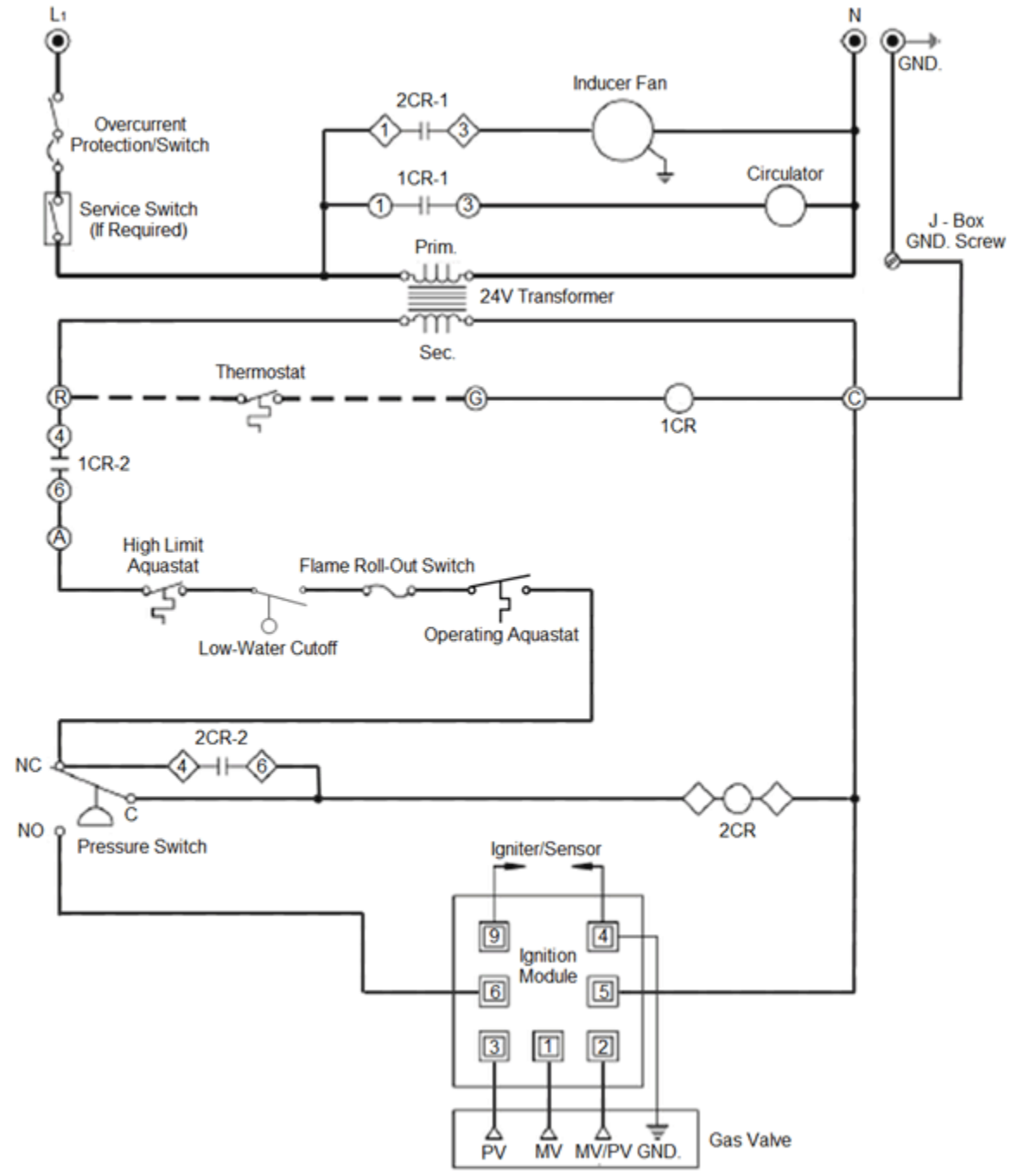

Select one or more:

☑

a.
Low Water Cut Off

☐

b.
1CR-1

c.
Pressure Switch

d.
2CR-1

e.
High Limit Aquastat

f.
Flame Roll Out Switch

g.
1CR-2

Feedback

Your answer is partially correct.

You have correctly selected 2.
The correct answers are: High Limit Aquastat, Low Water Cut Off, Flame Roll Out Switch, Pressure Switch

Question **21**
Correct
Mark 2.00 out of 2.00

Flag question

Question text

Answer Direct spark ignition

lights the main burner by use of a spark.

Answer Intermitent pilot ignition

must first ignite and prove the pilot which in turn lights the main burner, the pilot continues to burn until the main burner is extinguished.

Question **22**
Correct
Mark 1.00 out of 1.00

Flag question

Question text

What is the most common voltage used for “Hot Surface Igniters” ?

Select one:

a.
Any voltage above 24 volts

b.
24 volts

c.
120 volts

d.
240 volts

Feedback

Your answer is correct.

The correct answer is: 120 volts

Question **23**
Incorrect
Mark 0.00 out of 1.00

Flag question

Question text

Which type of ignition system would the control module illustrated below be used ?

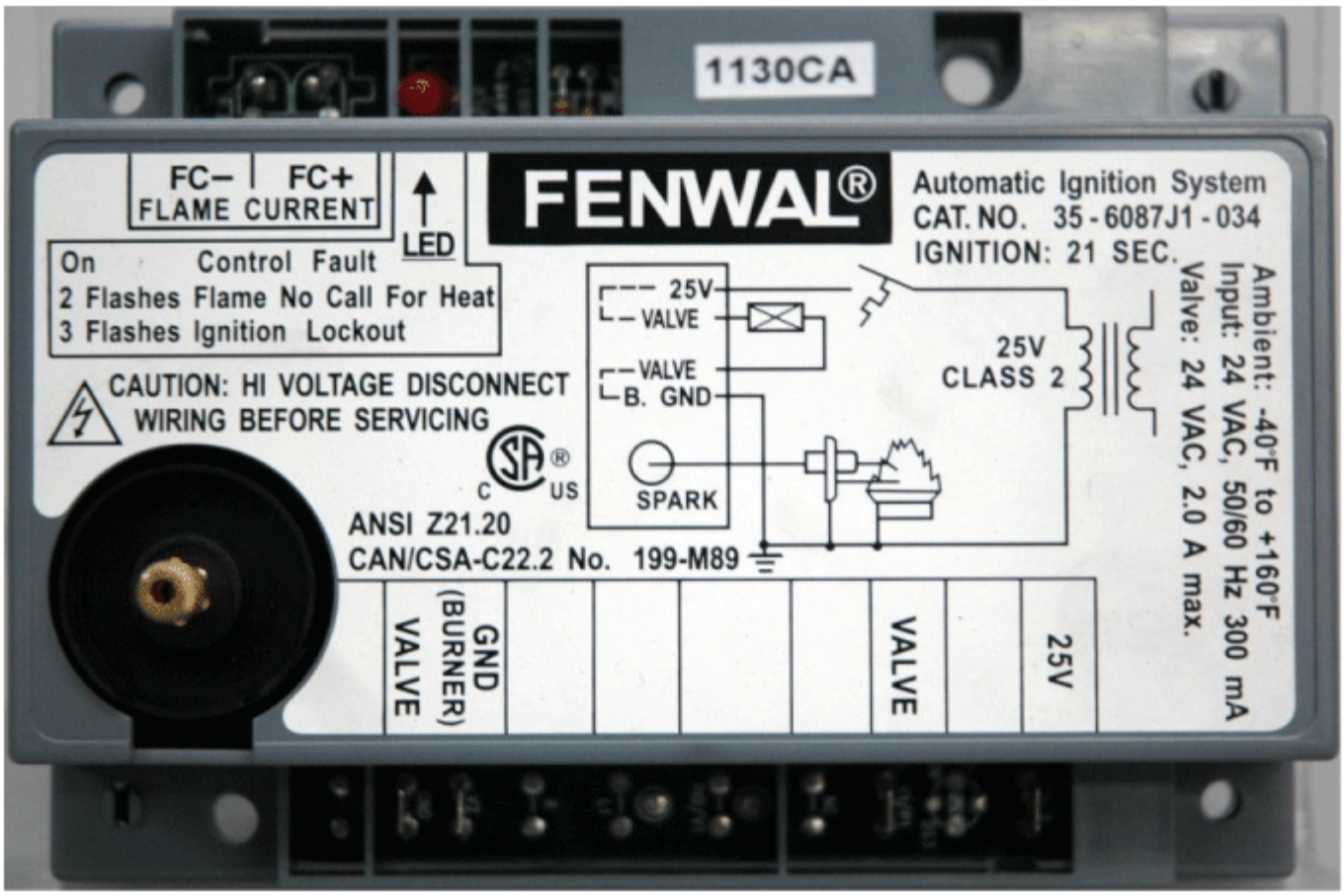

Select one:

a.
Standing Pilot

b.
Direct Spark Ignition

c.
FVR

d.
Direct Hot Surface

Feedback

Your answer is incorrect.

The correct answer is: Direct Spark Ignition

Question **24**
Incorrect
Mark 0.00 out of 1.00

Flag question

Question text

How would you reset a control module that has “Locked-Out”?

Select one:

a.
Push the reset button.

b.
Switch the appliance over to pilot ignition and run one complete cycle.

c.
Disconnect the spark igniter and call for heat to reset the module.

d.
Turn either the appliance disconnect switch off or the thermostat down for 1 – 3 minutes.

Feedback

Your answer is incorrect.

Turn either the appliance disconnect switch off or the thermostat down for 1 – 3 minutes.

The correct answer is: Turn either the appliance disconnect switch off or the thermostat down for 1 – 3 minutes.

Question **25**
Correct
Mark 1.00 out of 1.00

Flag question

Question text

What are the three major classifications of furnaces?

Select one or more:

a.
Direct Return

b.
Strap On

c.
Horizontal

d.
Intermittent

e.
Low Boy

f.
Blow Back

g.
High Boy

Feedback

Your answer is correct.

The correct answers are: High Boy, Low Boy, Horizontal

Question **26**
Correct
Mark 1.00 out of 1.00

Flag question

Question text

What are the two classifications of “High Boy” furnaces?

Select one or more:

a.
Counter-Flow or Downflow

b.
Upflow

c.
Forward Flow

d.
Upright

e.
Horizontal

Feedback

Your answer is correct.

The correct answers are: Upflow, Counter-Flow or Downflow

Question **27**
Incorrect
Mark 0.00 out of 2.00

Flag question

Question text

When determining the temperature rise across the heat exchanger of a furnace. A thermometer should be inserted into the return air plenum within Answer 2-3 Ft.

of the heat exchanger as well as a thermometer inserted into the supply plenum within Answer 6 Ft.

of the heat exchanger. The difference of these to readings is the temperature rise.

Feedback

Insert a thermometer into the return air plenum (within 6 ft.) and a thermometer into the supply plenum 2 to 3 feet away but not in the radiant view of the heat exchanger. The difference in temperature is the temperature rise.

Question **28**
Incorrect
Mark 0.00 out of 1.00

Flag question

Question text

Inserting an incline manometer or digital manometer into the return air plenum and supply plenum would determine which of the fallowing?.

Select one:

a.
Temperature Rise

b.
Internal Static pressure

c.
Flow Rate

d.
External Static Pressure

Feedback

Your answer is incorrect.

Insert an incline manometer or digital manometer into the return air plenum and supply plenum. The difference in pressure is the external static pressure (ESP).

The correct answer is: External Static Pressure

Question **29**

Correct

Mark 1.00 out of 1.00

Flag question

Question text

Identify the fan motor illustrated below :

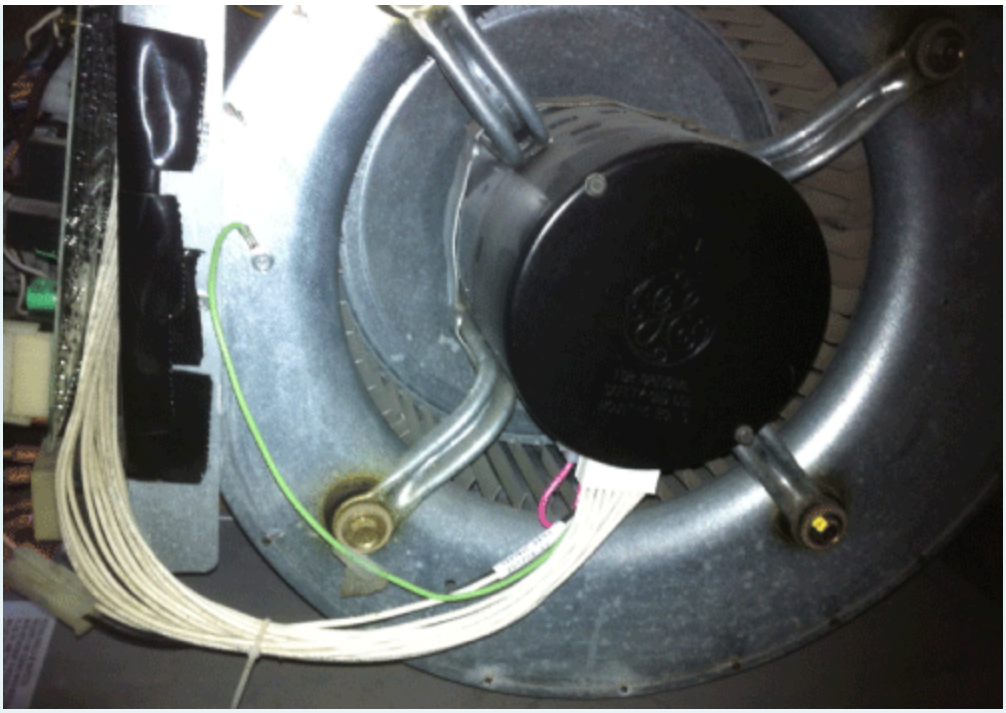

Select one:

a.
Flux Capacitor Fan Motor

b.
Injector Fan Motor

c.
ECM variable speed direct drive fan motor

d.
Modulating Fan Motor

Feedback

Your answer is correct.

The correct answer is: ECM variable speed direct drive fan motor

Question **30**
Incorrect
Mark 0.00 out of 1.00

Flag question

Question text

What could cause a belt drive fan motor blower to be noisy and inefficient?

Select one:

a.
no lubrication

b.
tear

c.
alignment

d.
material

Feedback

Your answer is incorrect.

The correct answer is: alignment

Question **31**
Correct
Mark 1.00 out of 1.00

Flag question

Question text

What are the two types of direct drive fan motors?

Select one or more:

a.
Leaver (LFM)

b.
Eccentric Rotor (ECM)

c.
Variable Speed (ECM)

d.
Multi-speed (PSC)

Feedback

Your answer is correct.

The correct answers are: Multi-speed (PSC), Variable Speed (ECM)

Question **32**

Incorrect

Mark 0.00 out of 1.00

Flag question

Question text

Referring to the illustration below, which type of direct drive fan motor would be used?

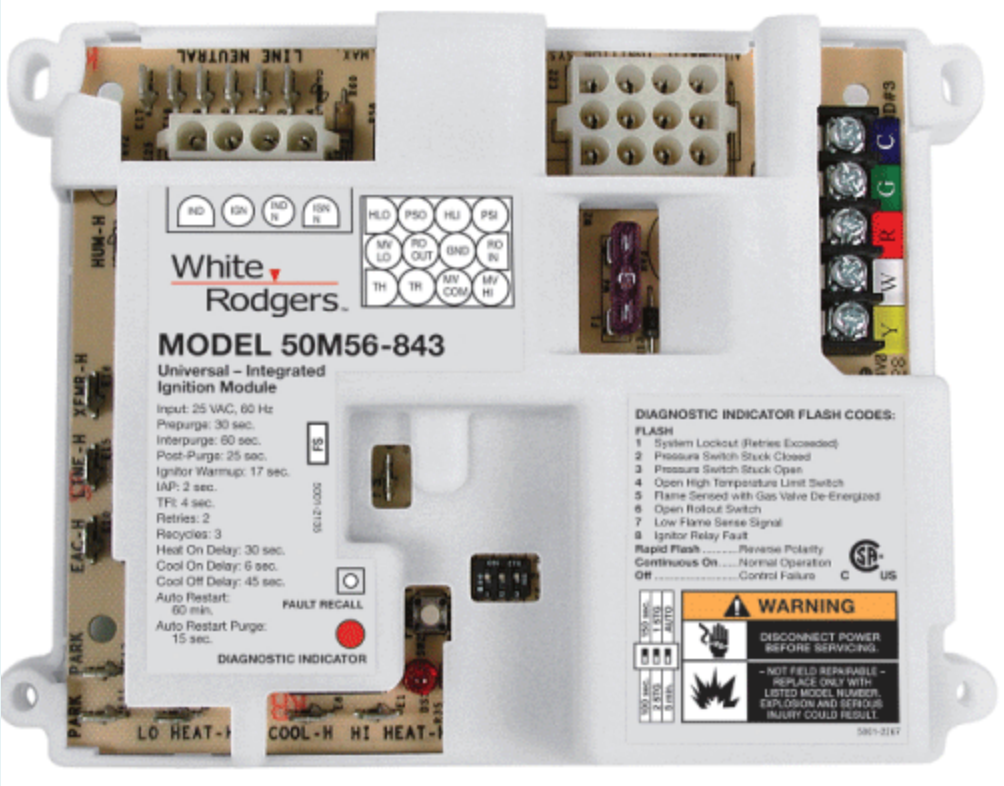

Select one:

a.
Oscillating-drive

b.
Single-speed

c.
Any type of fan drive will work

d.
Multi-speed

Feedback

Your answer is incorrect.

The correct answer is: Multi-speed

Question **33**
Correct
Mark 1.00 out of 1.00

Flag question

Question text

What is meant by the term “ECM” motor?

Select one:

a.
Electronically Controlled Motor

b.
Electric Combination Motor

c.
Electronically Cooled Motor

d.
Electronically Commutated Motor

Feedback

Your answer is correct.

The correct answer is: Electronically Commutated Motor

Question **34**
Correct
Mark 1.00 out of 1.00

Flag question

Question text

If a furnace has a cooling coil installed that has a rated capacity of 40,000 Btuh, what would be the required air flow in CFM?

Answer 1333 CFM

Feedback

40 000 Btuh / 12 000 = 3.33 tons

3.33 tons x 400CFM/Ton = 1 333.33 CFM

The correct answer is: 1333.33

Question **35**
Incorrect
Mark 0.00 out of 1.00

Flag question

Question text

If a furnace has a rated output of 60,000 Btuh and the rating plate specifies a temperature rise of 40°- 60°F, what would be the required air flow in CFM?

Answer: 1296

Feedback

CFM = Btuh (output) / (1.08 x ΔT)

CFM = 60 000Btuh / (1.08 x 50F)

CFM = 1 111.11

The correct answer is: 1111.11

Question **36**
Partially correct
Mark 3.00 out of 4.00

Flag question

Question text

If a furnace has the below values found on its rating plate, what would be the required fan speed for both high fire and low fire?

Appliance rating plate

Heat Stage	HIGH	LOW
Input / Entree BTU/Hr	123 000	81 000
Output / Sortie BTU/Hr	101 000	66 000
Air Temperature Rise F	45-75	25-55
Air Temperature Rise C	25-42	14-31
External Static Pressure	max. 0.5 in wc	

Fan Selection Table

Air Delivery in Cubic Feet per Minute (CFM)								
Fan Speed	External Static Pressure (in.w.c.)							
	0.1	0.2	0.3	0.4	0.5	0.6	0.7	0.8
High	2010	1950	1875	1810	1740	1660	1550	1455
Med-High	1675	1660	1625	1600	1545	1490	1395	1295
Med-Low	1445	1430	1415	1400	1370	1325	1265	1170
Low	1260	1260	1260	1250	1210	1180	1115	1030

High Fire CFM = Answer 1558

CFM (calculated)

Low Fire CFM = Answer 1527

CFM (calculated)

High Fire fan selection = Answer Med-Low

Low Fire fan selection = Answer Med-High

Feedback

High Fire = 101 000BTUH/ (1.08 x 60F) = 1558.64 CFM

Low Fire = 66 000BTUH/ (1.08 x 40F) = 1527.78 CFM

Question **37**

Correct

Mark 1.00 out of 1.00

Flag question

Question text

A forced air furnace through which the circulating air flows in the opposite direction to the flue gas is a/an :

Select one:

a.
counter flow furnace

b.
horizontal furnace

c.
low boy furnace

d.
up-flow furnace

Feedback

Your answer is correct.

The correct answer is: counter flow furnace

Question **38**

Correct

Mark 1.00 out of 1.00

Flag question

Question text

The basic job of an operating control on a boiler is to :

Select one:

a.
start the pump when the boiler water gets too cold

b.
energize the burner when the boiler water level gets too low

c.
energize the burner when the boiler water gets too hot

d.
energize the burner when the boiler water gets too cold

Feedback

Your answer is correct.

The correct answer is: energize the burner when the boiler water gets too cold

Question **39**

Incorrect

Mark 0.00 out of 1.00

Flag question

Question text

The fan control on a forced air furnace generally operates on :

Select one:

a.
24 V

b.
120 V

c.
30 mV

d.
750 mV

Feedback

Your answer is incorrect.

The correct answer is: 120 V

Question **40**

Correct

Mark 1.00 out of 1.00

Flag question

Question text

If the voltage produced by a thermocouple is less than 7 millivolts and the magnet will not hold in :

Select one:

a.
increase the high limit setting

b.
change the magnet

c.
change the thermocouple

d.
reduce the input to the pilot

Feedback

Your answer is correct.

The correct answer is: change the thermocouple

Question **41**

Incorrect

Mark 0.00 out of 1.00

Flag question

Question text

What supplies power to the safety shut-off valve for an appliance that has a 24V control system and a standing pilot?

Select one:

a.
Thermopile

b.
Transformer

c.
Thermocouple

d.
Photocell

Feedback

Your answer is incorrect.

The correct answer is: Thermocouple

Question **42**
Correct
Mark 1.00 out of 1.00

Flag question

Question text

What is the primary purpose of a thermocouple ?

Select one:

a.
To prove that the pilot is lit

b.
To energize the gas valve

c.
To give 100% safety

d.
To supply power to the thermostat

Feedback

Your answer is correct.

The correct answer is: To prove that the pilot is lit

Question **43**
Incorrect
Mark 0.00 out of 1.00

Flag question

Question text

In the illustration shown below, what does Item “A” indicate ?

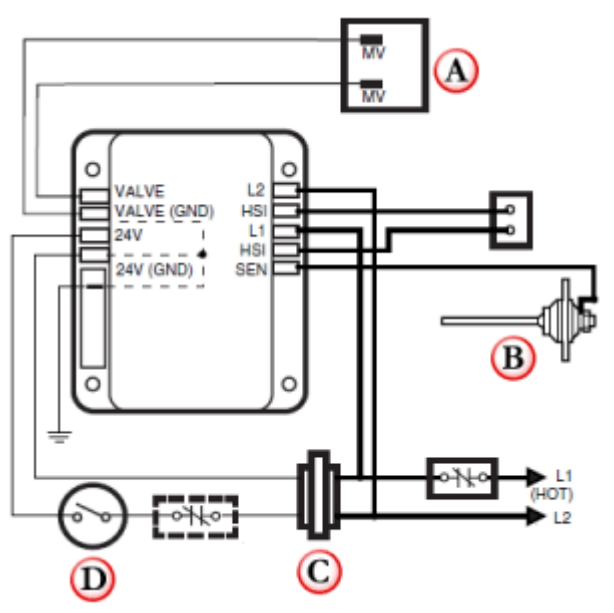

Select one:

a.
Limit control

b.
Gas valve

c.
Power supply

d.
Ignition module

Feedback

Your answer is incorrect.

The correct answer is: Gas valve

Question **44**
Incorrect
Mark 0.00 out of 1.00

Flag question

Question text

Which type of ignition system is illustrated?

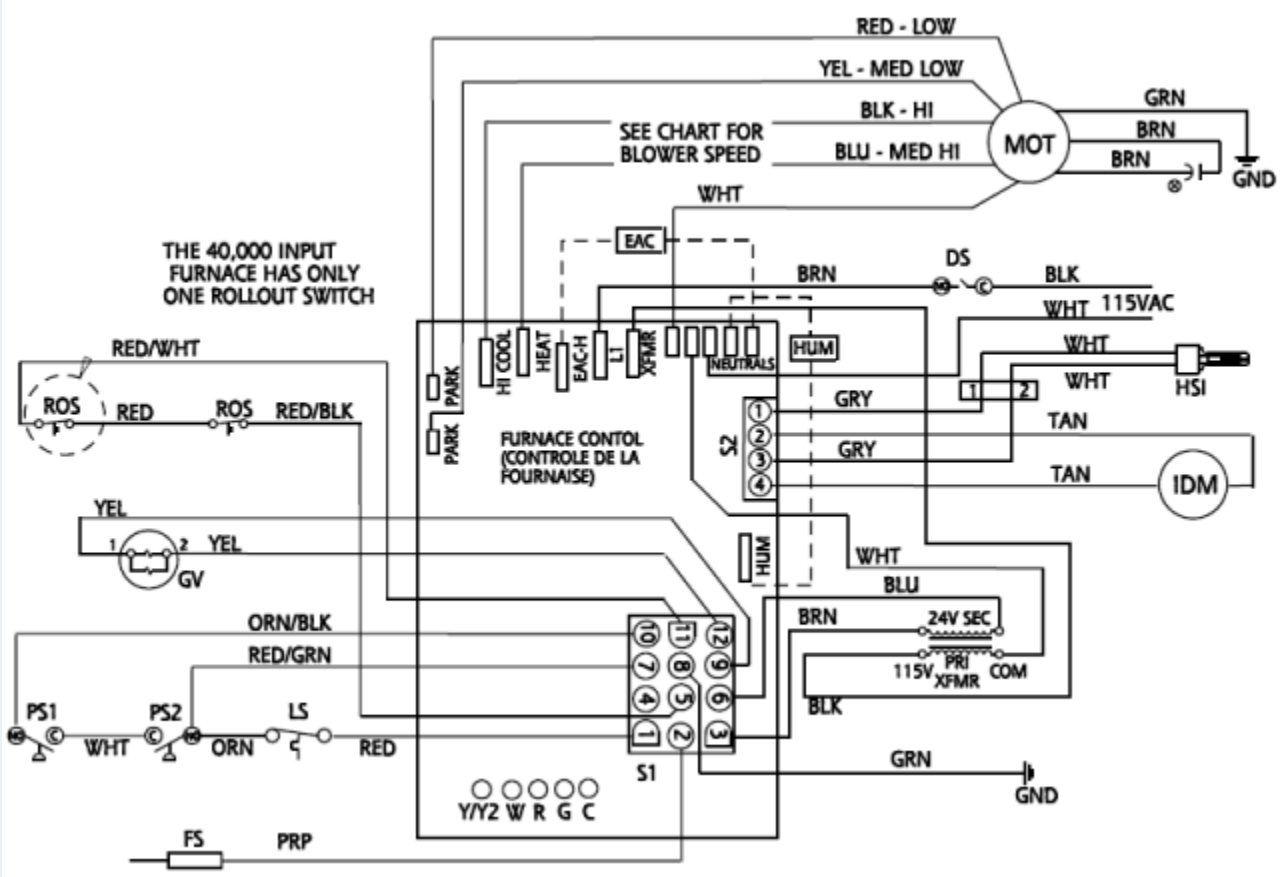

Select one:

a.
Intermittent pilot with hot surface

b.
Direct spark

c.
Direct hot surface

d.
Intermittent pilot with spark

Feedback

Your answer is incorrect.

The correct answer is: Direct hot surface

Question **45**
Correct
Mark 1.00 out of 1.00

Flag question

Question text

Which fan speed is connected to the heating terminal ?

Select one:

a.
Med High

b.
Med Low

c.
High

d.
Low

Feedback

Your answer is correct.

The correct answer is: Med High

Question **46**
Correct
Mark 1.00 out of 1.00

Flag question

Question text

Which device is connected to the terminal “XFMR”?

Select one:

a.
Flame Rod

b.
Transformer

c.
Inducer Motor

d.
Blower Motor

Feedback

Your answer is correct.

The correct answer is: Transformer

Question **47**

Correct

Mark 1.00 out of 1.00

Flag question

Question text

Which type of flame sensor is to be used ?

Select one:

a.
Infrared detector

b.
Flame rod

c.
Thermocouple

d.
Ultraviolet detector

Feedback

Your answer is correct.

The correct answer is: Flame rod

Question **48**
Incorrect
Mark 0.00 out of 1.00

Flag question

Question text

How many pressure switches are required?

Select one:

a.
2

b.
1

c.
3

d.
4

Feedback

Your answer is incorrect.

The correct answer is: 2

Question **49**
Partially correct
Mark 0.50 out of 1.00

Flag question

Question text

According to the illustration which fan speeds are not being used ?

Select one or more:

a.
Med High

b.
Med Low

c.
Low

d.
Med

Feedback

Your answer is partially correct.

You have correctly selected 1.
The correct answers are: Low, Med Low

Question **50**
Correct
Mark 1.00 out of 1.00

Flag question

Question text

Which terminals are the transformer secondary connected to?

Select one:

a.
9 and 12

b.
5 and 11

c.
3 and 6

d.
2 and 4

Feedback

Your answer is correct.

The correct answer is: 3 and 6

Question **51**
Correct

Mark 1.00 out of 1.00

Flag question

Question text

Using the illustration shown below, select the proper wiring to connect the fan motor and thermostat to the appropriate terminals on the circuit board. The fan motor is to run at high speed for cooling, Med High for heating and low speed for continuous operation:

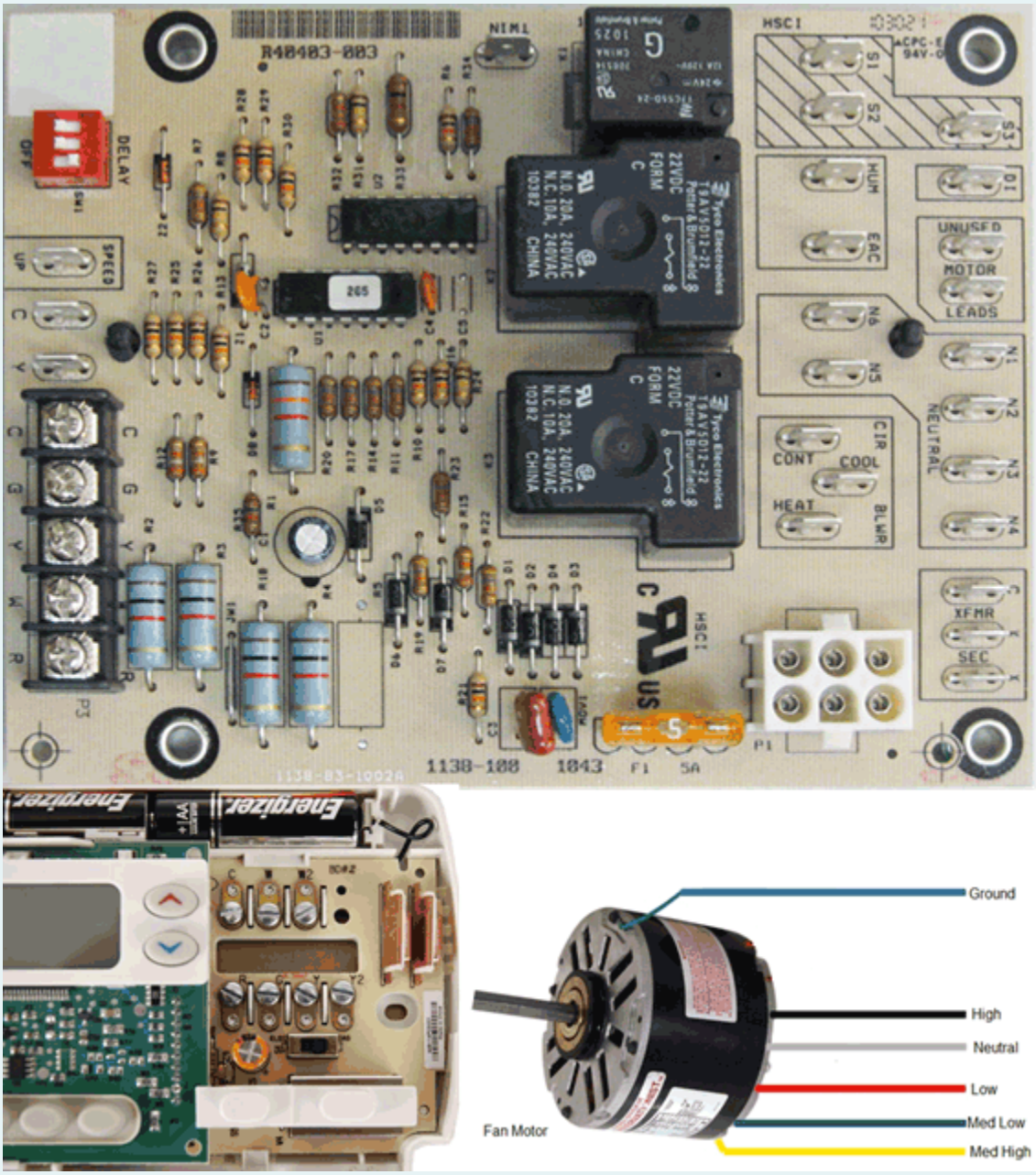

Select one:

a.

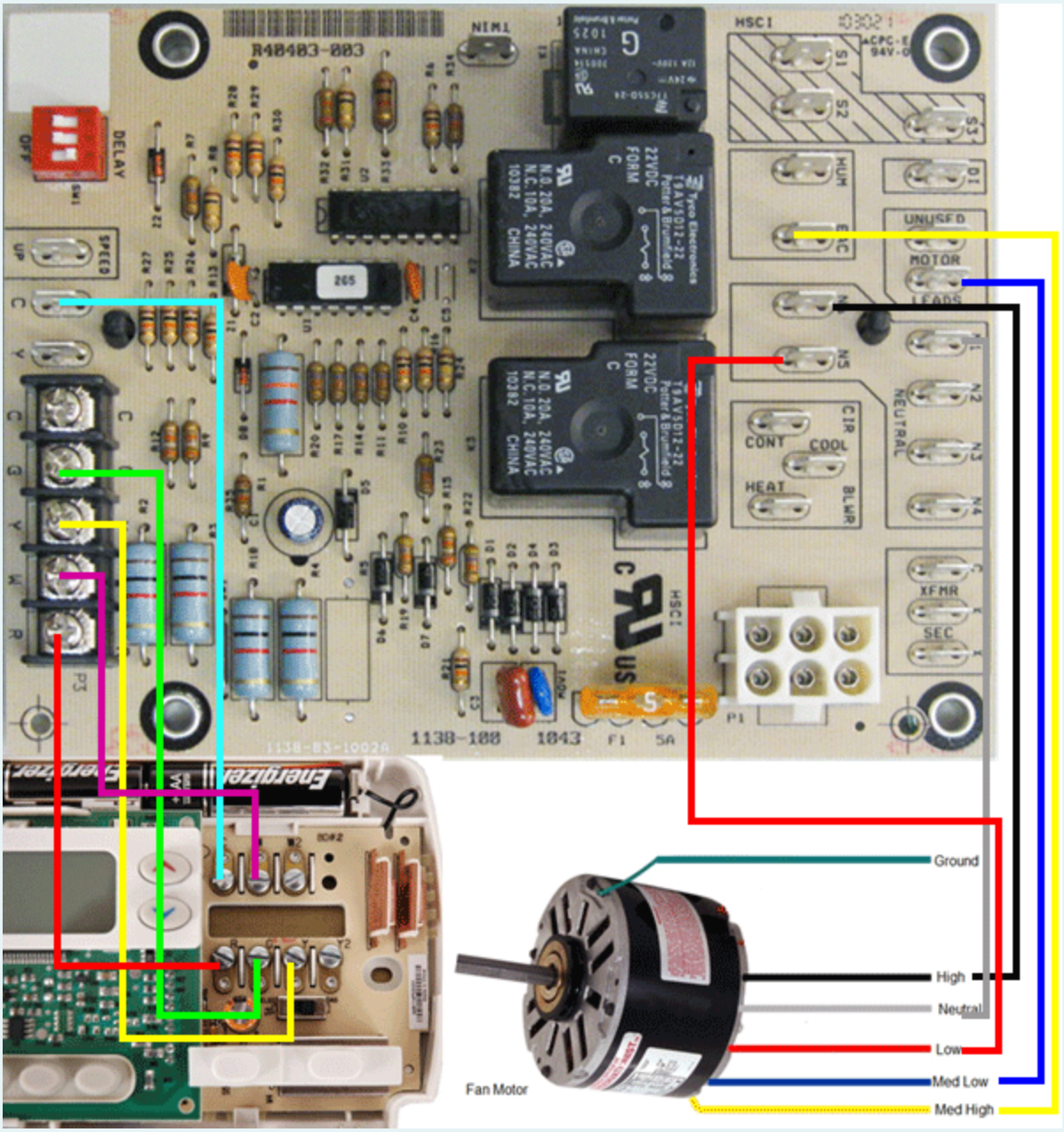

b.

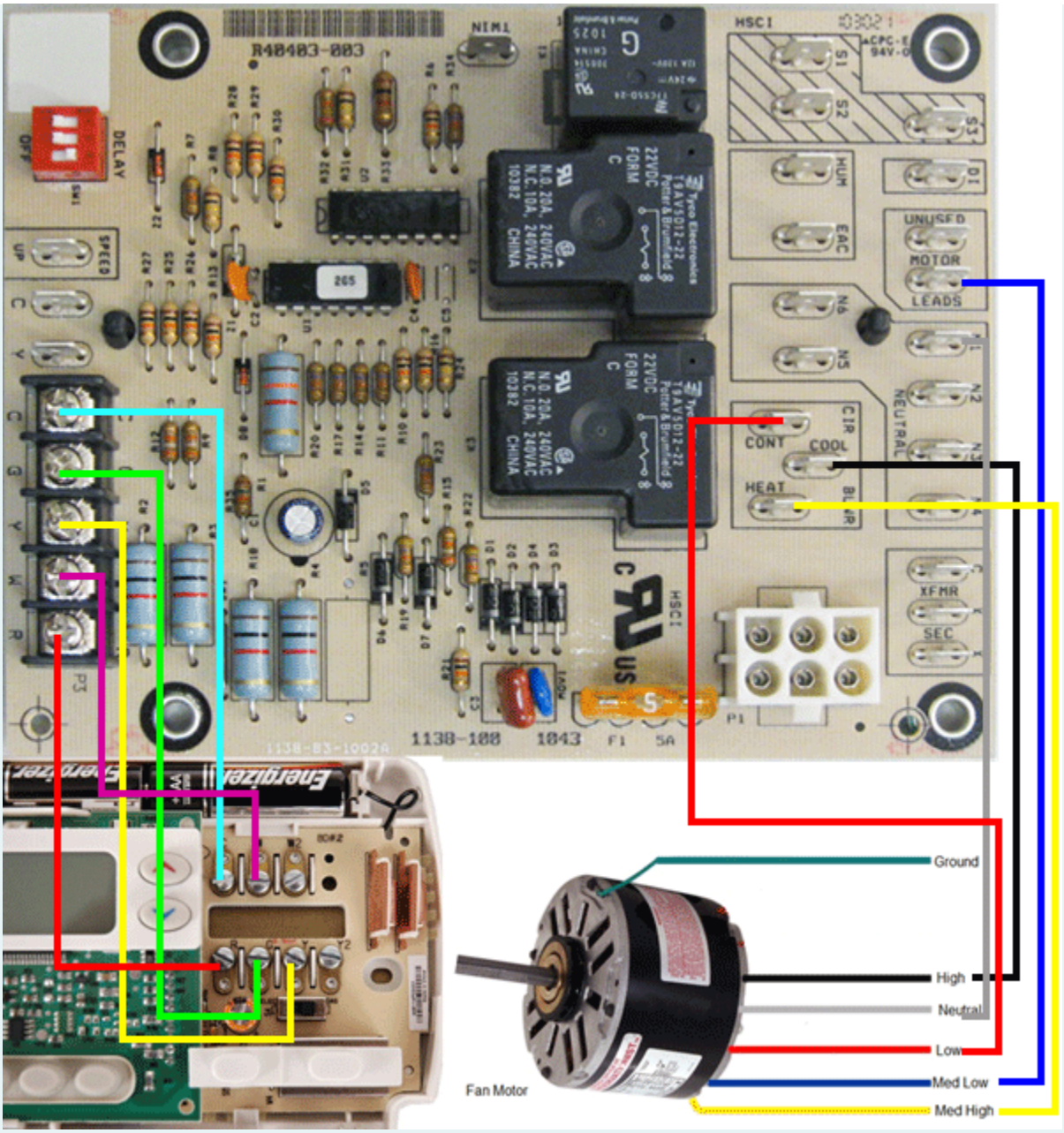

c.

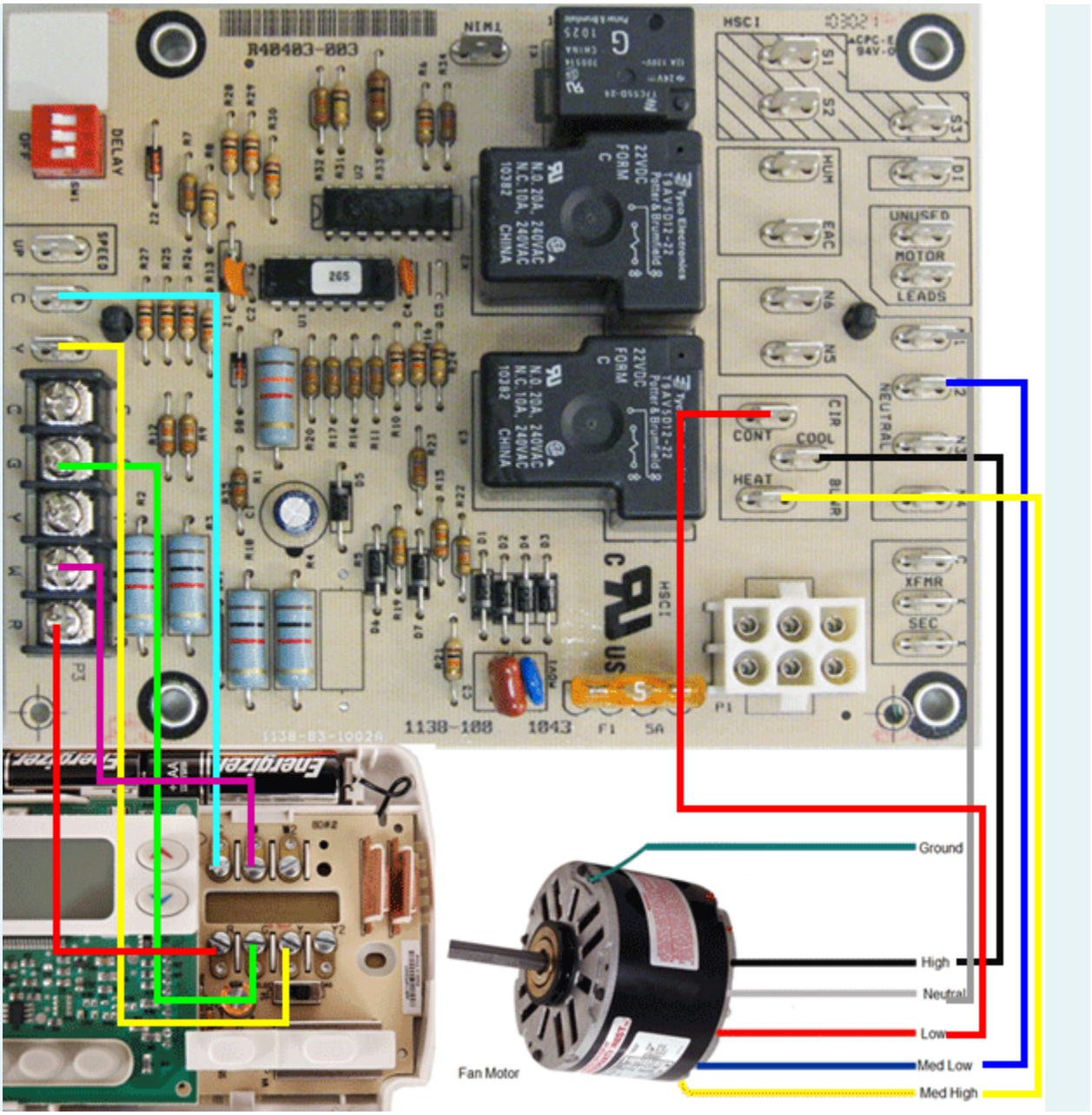

Feedback

Your answer is correct.

The correct answer is:

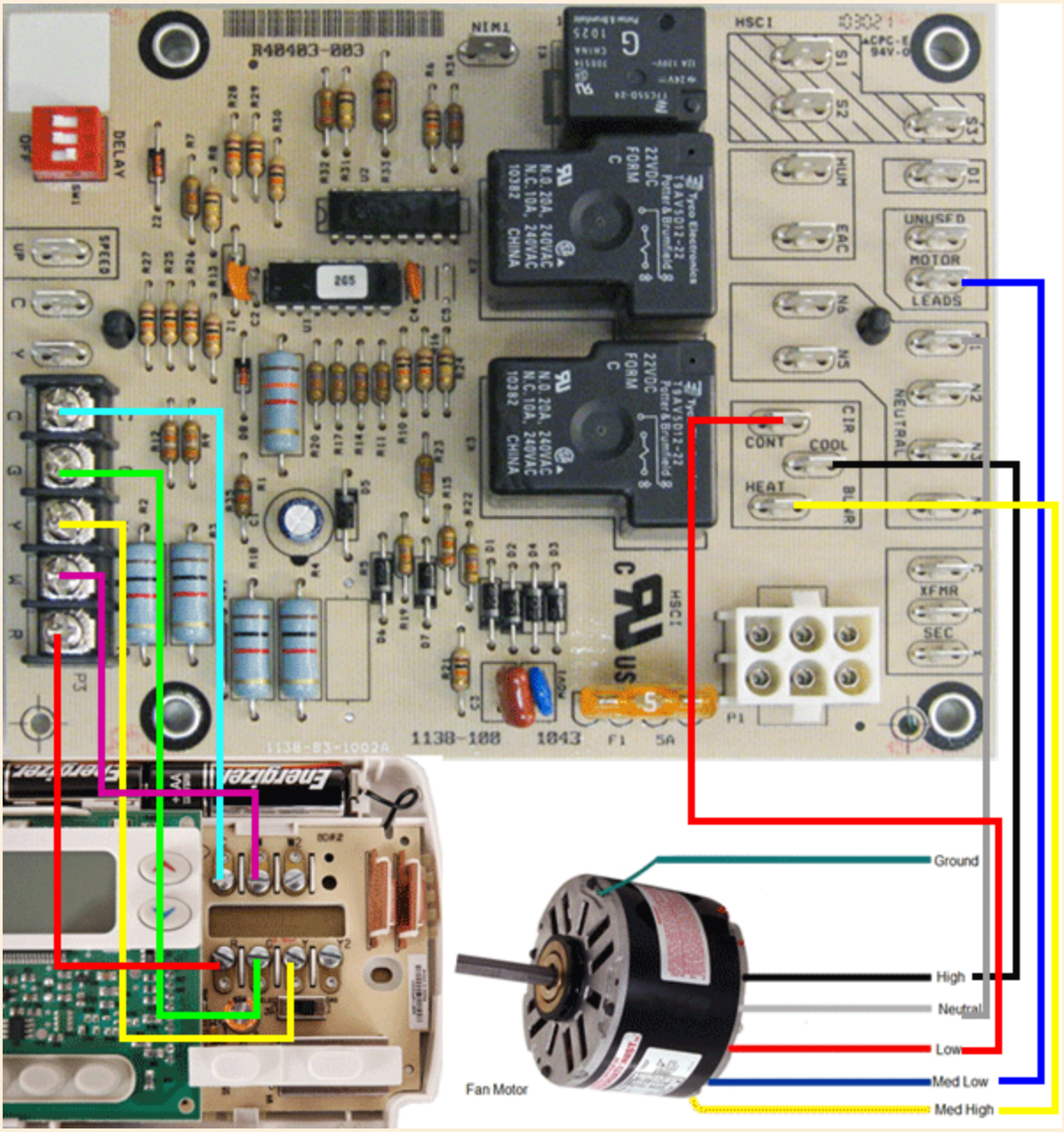

Question **52**
Correct
Mark 1.00 out of 1.00

Flag question

Question text

Referring to the following illustration, on a call for heat the remote operator (thermostat) contacts close. What would be the next step in the sequence of operation?

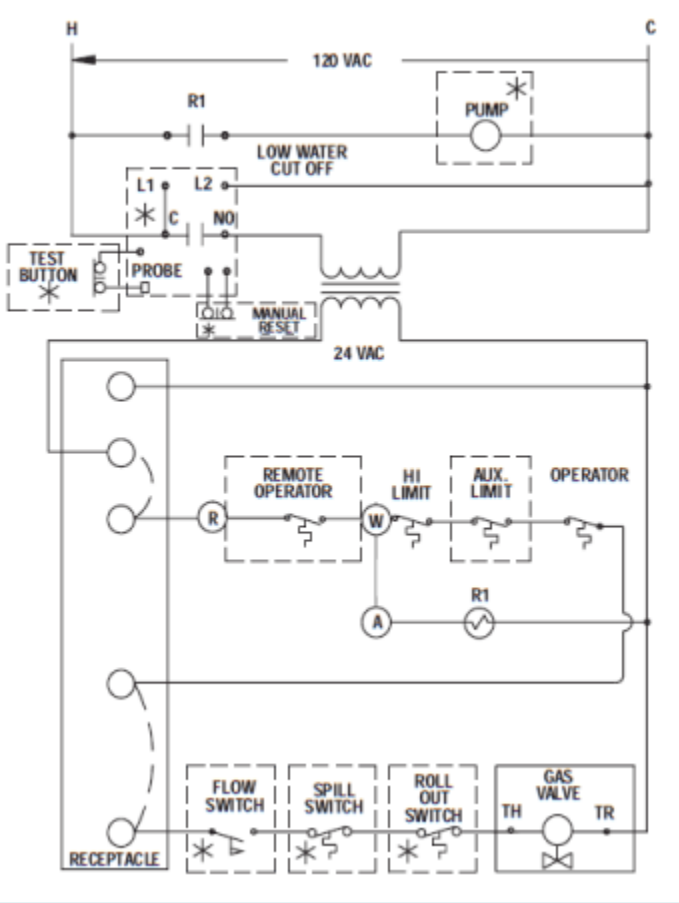

Select one:

a.
R1 is energized which opens the gas valve

b.
The Aux. Limit opens it contacts which energizes the pump

c.
The flow switch closes its contacts and energizes the gas valve

d.
Relay Coil R1 is energized, closing its contacts which energizes the pump

Feedback

Your answer is correct.

The correct answer is: Relay Coil R1 is energized, closing its contacts which energizes the pump

The operation and input of manual and automatic commands to run and monitor motors and devices can be done with_____?

Select one:

a.

Infrared communication

b.

Magic

c.

Network protocols

d.

USB

Feedback

Your answer is incorrect.

The correct answer is: Network protocols

Question **2**

Correct

Mark 1.0 out of 1.0

Flag question

Question text

Data is transmitted through a variety of different types of physical connections? (Identify three types)

Select one or more:

a.

Wi-Fi

☑

b.

RJ11

☑

c.

USB

☑

d.

Serial

☐

e.

Bluetooth

☐

f.

Cellular

Feedback

Your answer is correct.

The correct answers are: Serial, RJ11, USB

Question **3**

Incorrect

Mark 0.0 out of 1.0

Flag question

Question text

The acronym BACnet stands for?

Select one:

◉

a.

Biometric Access Control Network

b.

Building Automation and Control Network

c.

Building Automation and Communications Network

d.

Bank of America Corporate Network

Feedback

Your answer is incorrect.

The correct answer is: Building Automation and Control Network

Question **4**

Incorrect

Mark 0.0 out of 1.0

Flag question

Question text

The LON is a Protocol primarily designed to be used with what type of mechanical system?

Select one:

a.

Elevator

b.

Sprinklers

c.

HVAC

d.

Plumbing

Feedback

Your answer is incorrect.

The correct answer is: HVAC

Question **5**

Incorrect

Mark 0.0 out of 1.0

Flag question

Question text

PLC programming software can be used on a variety of different manufacturer's hardware?

Select one:

a.

True

b.

False

Feedback

Your answer is incorrect.

The correct answer is: False

Question **6**

Correct

Mark 1.0 out of 1.0

Flag question

Question text

PLC Programming software can be modified using a graphical interface, this interface is known as?

Select one:

a.

RFI (Request further Information)

b.

HMI (Human Machine Interface)

c.

RMI (Running Man Interface)

d.

CCI (Chevy chase index)

Feedback

Your answer is correct.

The correct answer is: HMI (Human Machine Interface)

Question **7**

Correct

Mark 1.0 out of 1.0

Flag question

Question text

A user defined PLC program might include pausing points, another name for a pause in a program is?

Select one:

a.

Initiating program

b.

Function

c.

Stop

d.

Interrupt

Feedback

Your answer is correct.

The correct answer is: Interrupt

Question **8**

Incorrect

Mark 0.0 out of 1.0

Flag question

Question text

Universal serial bus (USB) connectors that can transmit data in both directions are known by which type?

Select one:

a.

Type C

b.

Type B

c.

Type D

d.

Type A

Feedback

Your answer is incorrect.

The correct answer is: Type C

Question **9**

Incorrect

Mark 0.0 out of 1.0

Flag question

Question text

USB Cords typically have four wires running the length to the ends, two wires are used for power and the other set of wires is used for _____?

Select one:

a.

Grounding and Bonding

b.

Bluetooth transfer

c.

Communications

d.

Data

Feedback

Your answer is incorrect.

The correct answer is: Data

Question **10**

Correct

Mark 1.0 out of 1.0

Flag question

Question text

RS-232 serial connections use a specific type of coding to transmit data, the voltages were sent as positive and negative voltages, which produces what type of communication language?

Select one:

a.

C++

b.

Pascal

c.

Binary

d.

DOS

Feedback

Your answer is correct.

The correct answer is: Binary

Question **11**

Incorrect

Mark 0.0 out of 1.0

Flag question

Question text

Serial Connections are able to communicate from controller to controller?

Select one:

a.

True

b.

False

Feedback

Your answer is incorrect.

The correct answer is: False

Question **12**

Incorrect

Mark 0.0 out of 1.0

Flag question

Question text

The abbreviation RJ means which of the following?

Select one:

a.

Rick James

b.

Royal Jack

c.

Random Jack

d.

Registered Jack

Feedback

Your answer is incorrect.

The correct answer is: Registered Jack

Question **13**

Incorrect

Mark 0.0 out of 1.0

Flag question

Question text

The typical RJ45 Cord has how many wires passing through it?

Select one:

a.

12 wires

b.

6 wires

c.

4 wires

d.

8 wires

Feedback

Your answer is incorrect.

The correct answer is: 8 wires

Question **14**

Incorrect

Mark 0.0 out of 1.0

Flag question

Question text

Networking cable is of what type of RJ value?

Select one:

a.

11

b.

65

c.

45

d.

21

Feedback

Your answer is incorrect.

The correct answer is: 45

Question **15**

Incorrect

Mark 0.0 out of 1.0

Flag question

Question text

What application(s) could utilize the Z-wave communication system?

a.

Wired communication for home heating and or security systems.

b.

Wired communications for snapchat protocols.

c.

Wireless communication for home heating and or security systems.

d.

Wireless communication for programing appliance control boards.

Feedback

Your answer is incorrect.

The correct answer is:

Wireless communication for home heating and or security systems.

Outdoor resets adjust the boiler water supply temperature based on the ambient outdoor temperature?

Select one:

a.

True

b.

False

Feedback

Your answer is correct.

The correct answer is: True

Question **2**

Correct

Mark 1.00 out of 1.00

Flag question

Question text

A Non-condensing boiler typically operates in the temperature range of _____?

Select one:

a.

120°F – 150°F

b.

140°F – 170°F

c.

160°F – 190°F

d.

135°F – 185°F

Feedback

Your answer is correct.

The correct answer is: 160°F – 190°F

Question **3**

Correct

Mark 1.00 out of 1.00

Flag question

Question text

The average savings using an outdoor reset controller is 1% for every 5°F reduction in boiler temperature, how much percentage reduction would be granted at a 35°F temperature drop?

Select one:

a.

3% Savings

b.

1% Savings

c.

5% Savings

d.

7% Savings

Feedback

Your answer is correct.

The correct answer is: 7% Savings

Question **4**

Incorrect

Mark 0.00 out of 1.00

Flag question

Question text

To promote longevity of a boiler, manufacturers recommend that boilers not be allowed to _____?

Select one:

a.

Long cycle

b.

Short cycle

c.

Run constantly

d.

Turn off

Feedback

Your answer is incorrect.

The correct answer is: Short cycle

Question **5**

Incorrect

Mark 0.00 out of 1.00

Flag question

Question text

Boilers that are set to operate in a pre-defined sequence of rotating operation is a definition of _____?

Select one:

a.

Multiple Control

b.

Rotating Control

c.

Cascading Control

d.

Staging Control

Feedback

Your answer is incorrect.

The correct answer is: Cascading Control

Question **6**

Correct

Mark 1.00 out of 1.00

Flag question

Question text

In multiple boiler configurations the outdoor reset is connected to which boiler?

Select one:

a.

Any Boiler

b.

The Furthest Boiler

c.

The Managing Boiler

d.

The Second Boiler

Feedback

Your answer is correct.

The correct answer is: The Managing Boiler

Question **7**

Correct

Mark 1.00 out of 1.00

Flag question

Question text

When connecting multiple boilers to a terminal block, how are the boilers wired to the low voltage terminals?

Select one:

a.

In Series/ Parallel

b.

In Series

c.

In order

d.

In Parallel

Feedback

Your answer is correct.

The correct answer is: In Parallel

Question **8**
Incorrect

Mark 0.00 out of 1.00

Flag question

Question text

When connecting multiple boilers to terminal blocks using 22 gauge wire, what is the maximum length of wire that can be run?

Select one:

a.

150 Feet

b.

200 Feet

c.

100 Feet

d.

110 Feet

Feedback

Your answer is incorrect.

The correct answer is: 100 Feet

Question **9**
Correct

Mark 1.00 out of 1.00

Flag question

Question text

When connecting multiple boilers to terminal blocks and the wire length exceeds the recommended maximum length, what condition is created in the wiring? An excessive amount of _____?

Select one:

a.

Voltage

b.

Amperage

c.

Resistance

d.

Power

Feedback

Your answer is correct.

The correct answer is: Resistance

Question **10**

Correct

Mark 1.00 out of 1.00

Flag question

Question text

Use the image to answer the following question.

The abbreviation RL stands for what?

Select one:

a.

Right Line

b.

Rolling Terminal

c.

Regulated terminal

d.

Relay

Feedback

Your answer is correct.

The correct answer is: Relay

Question **11**

Correct

Mark 1.00 out of 1.00

Flag question

Question text

Use the image to answer the following question.

Which terminals are used as part of the flow verification circuit?

Select one:

a.

Terminals 5-6

b.

Terminals 13-14

c.

Terminals 3-4

d.

Terminals 1-2

Feedback

Your answer is correct.

The correct answer is: Terminals 3-4

Question **12**
Incorrect

Mark 0.00 out of 1.00

Flag question

Question text

Use the image to answer the following question.

Terminals 7-8 are used as boiler water sensor inputs what device is connected to those terminals to send a signal to the controller?

Select one:

a.

Transparent sensor

b.

Thermometer

c.

Thermistor

d.

Transformer

Feedback

Your answer is incorrect.

The correct answer is: Thermistor

Question **13**

Correct

Mark 1.00 out of 1.00

Flag question

Question text

A thermistor is another name for what device?

Select one:

a.

A Terminal

b.

A Transformer

c.

An Outdoor Sensor

d.

A Relay

Feedback

Your answer is correct.

The correct answer is: An Outdoor Sensor

Question **14**

Incorrect

Mark 0.00 out of 1.00

Flag question

Question text

Use the following image to answer the question.

If a resister is attached to terminals 10-11 what is the resistance value of the connected resister when used as a thermistor input?

Select one:

a.

20 Ohms

b.

5 Ohms

c.

15 Ohms

d.

10 Ohms

Feedback

Your answer is incorrect.

The correct answer is: 10 Ohms

Question **15**
Incorrect

Mark 0.00 out of 1.00

Flag question

Question text

Use the following image to answer the question.

In the pump sequencing mode, the terminals 23 -25 are used for the supply power for which pump?

Select one:

a.

The backup/standby system pump

b.

The controller

c.

The main system pump

d.

The auxiliary thermistor

Feedback

Your answer is incorrect.

The correct answer is: The backup/standby system pump

The installation of an insulated #12 AWG copper neutral conductor shall comply with which of the following requirement ?

Select one:

a.
All the options requirement apply to the installation of a neutral condutor

b.
It shall be installed in all separately enclosed switches

c.
It may be identified by a white covering

d.
It may be identified by a natural grey covering

Feedback

Your answer is incorrect.

The correct answer is: All the options requirement apply to the installation of a neutral condutor

Question **2**

Correct

Mark 1.00 out of 1.00

Flag question

Question text

Which one of the following tables , from the electrical code would be used to determine the full load current of a single phase AC motor ?

Select one:

a.
Table 44

b.
Table 17

c.
Table 37

d.
Table 45

Feedback
Your answer is correct.

The correct answer is: Table 45

Question **3**
Incorrect
Mark 0.00 out of 1.00

Flag question

Question text
The electrical code table that identifies the conditions of use for extra-low-voltage control cable (LVT) is ;

Select one:

a.
Table D1

b.
Table 19

c.
Table 60

d.
Table 11

Feedback
Your answer is incorrect.

The correct answer is: Table 19

Question **4**
Correct
Mark 1.00 out of 1.00

Flag question

Question text

Non-metallic sheathed cable used in exposed wiring installations shall be adequately protected against damage when it is installed below which one of the following heights ?

Select one:

a.
2 meters

b.
1 meter

c.
1.5 meters

d.
2.5 meters

Feedback

Your answer is correct.

The correct answer is: 1.5 meters

Question **5**

Correct

Mark 1.00 out of 1.00

Flag question

Question text

A permit is required before commencing work with respect to installation, alteration repair or extension of any electrical equipment.

Select one:

True

False

Feedback

The correct answer is 'True'.

Question **6**

Correct

Mark 1.00 out of 1.00

Flag question

Question text

Bonding means joining non-current carrying metal parts together to assure electrical continuity.

Select one:

- True
- False

Feedback

The correct answer is 'True'.

Question **7**

Correct

Mark 1.00 out of 1.00

Flag question

Question text

No one shall repair or alter live equipment , unless disconnection is not practicable.

Select one:

- True
- False

Feedback

The correct answer is 'True'.

Question **8**

Correct

Mark 1.00 out of 1.00

Flag question

Question text

The full load current rating (FLA) of a single phase 115V 3 HP AC motor is :

Select one:

a.
17 amps

b.
34 amps

c.
24 amps

d.
304 amps

Feedback
Your answer is correct.

The correct answer is: 34 amps

Question **9**
Correct
Mark 1.00 out of 1.00

Flag question

Question text
When must you apply for an electrical permit ?

Select one:

a.
Before any electrical work starts

b.
Immediately before the first electrical inspection

c.
Before any of the wire is covered or concealed

d.
Immediately before connection to the utility power supply

Feedback
Your answer is correct.

The correct answer is: Before any electrical work starts

Question **10**
Correct
Mark 1.00 out of 1.00

Flag question

Question text
What is the maximum circuit voltage-to-ground in a dwelling unit (single family) ?

Select one:

a.
240 V

b.
300 V

c.
30 V

d.
150 V

Feedback
Your answer is correct.

The correct answer is: 150 V

Question **11**
Incorrect
Mark 0.00 out of 1.00

Flag question

Question text
Which group provides certification for gas furnaces ?

Select one:

a.

A.G.A

b.
U.L

c.
C.G.A

d.
N.F.P.A

Feedback
Your answer is incorrect.

The correct answer is: U.L

Question **12**
Incorrect
Mark 0.00 out of 1.00

Flag question

Question text
Which of the following is not permitted as a disconnecting means ?

Select one:

a.
Switching breaker

b.
Disconnect switch

c.
Single pole switch

d.
Three way switch

Feedback
Your answer is incorrect.

The correct answer is: Three way switch

Question **13**
Incorrect
Mark 0.00 out of 1.00

Flag question

Question text
What is the minimum clearance between a receptacle and a gas meter installed within a building ?

Select one:

a.
300 mm

b.
10 m

c.
1000 mm

d.
1.5 m

Feedback
Your answer is incorrect.

The correct answer is: 1000 mm

Question **14**
Correct
Mark 1.00 out of 1.00

Flag question

Question text
What does the code letters TE refer to as when found marked on motors for use in non-hazardous locations ?

Select one:

a.

Torque engineerd

b.
Tungsten enamelled

c.
Tasmanian electric

d.
Totally enclosed

Feedback
Your answer is correct.

The correct answer is: Totally enclosed

Question **15**
Correct
Mark 1.00 out of 1.00

Flag question

Question text
What gauge 2 wire copper cable has an allowable ampacity of 15 amps ?

Select one:

a.
No 10

b.
No 16

c.
No 14

d.
No 12

Feedback
Your answer is correct.

The correct answer is: No 14

Question **16**
Correct
Mark 1.00 out of 1.00

Flag question

Question text
Which table shows the maximum current that can flow through a 2 or 3 conductor aluminum cable ?

Select one:

a.
Table 3

b.
Table 4

c.
Table 2

d.
Table 1

Feedback
Your answer is correct.

The correct answer is: Table 4

Question **17**
Incorrect
Mark 0.00 out of 1.00

Flag question

Question text
What is the ampacity of No.12 AWG NMD 90 copper conductor ?

Select one:

a.
20 amps

b.
40 amps

c.
15 amps

d.
30 amps

Feedback
Your answer is incorrect.

The correct answer is: 30 amps

Question **18**
Incorrect
Mark 0.00 out of 1.00

Flag question

Question text
What is the ampacity of a Type SO flexible cord with 2 No 14 AWG conductors ?

Select one:

a.
15 amps

b.
20 amps

c.
10 amps

d.
18 amps

Feedback
Your answer is incorrect.

The correct answer is: 18 amps

Question **19**

Correct
Mark 1.00 out of 1.00

Flag question

Question text
What color must be used for a neutral conductor ?

Select one:

a.
Green

b.
White

c.
Red

d.
Black

Feedback
Your answer is correct.

The correct answer is: White

Question **20**
Correct
Mark 1.00 out of 1.00

Flag question

Question text
What is the color of an insulated grounding or bonding conductor ?

Select one:

a.
White

b.
Green

c.
Red

d.
Black

Feedback
Your answer is correct.

The correct answer is: Green

Question **21**
Correct
Mark 1.00 out of 1.00

Flag question

Question text
What is the maximum ampacity of one No 4 TW75 aluminum conductor in free air ?

Select one:

a.
100 amps

b.
125 amps

c.
85 amps

d.
65 amps

Feedback
Your answer is correct.

The correct answer is: 100 amps

Question **22**
Incorrect
Mark 0.00 out of 1.00

Flag question

Question text

What minimum size conductor required to feed a 120V, 10A furnace circuit if the conduit between the panel and the junction box near the furnace carries 7 conductors ?

Select one:

a.
NMD90 12AWG

b.
RW60 14AWG

c.
TW75 12AWG

d.
1/0

e.
TW75 14 AWG

Feedback

Your answer is incorrect.

The correct answer is: TW75 14 AWG

Question **23**

Incorrect

Mark 0.00 out of 1.00

Flag question

Question text

Low voltage is considered to be :

Select one:

a.
0 to 50 volts

b.
0 to 30 volts

c.
310 to 1750 volts

d.
31 to 750 volts

Feedback
Your answer is incorrect.

The correct answer is: 31 to 750 volts

Question **24**
Correct
Mark 1.00 out of 1.00

Flag question

Question text
The nominal supply voltage of a safety control circuit for gas or oil fuel burning equipment shall not exceed which one of the following voltages ?

Select one:

a.
24 volts

b.
40 volts

c.
240 volts

d.
120 volts

Feedback
Your answer is correct.

The correct answer is: 120 volts

Question **25**
Correct
Mark 1.00 out of 1.00

Flag question

Question text
Where armoured cables are bent during installation the radius of the curve of the inner edge of the bends shall be at least _____ times the external diameter of the armoured cable ?

Select one:

a.
6

b.
3

c.
2

d.
5

Feedback
Your answer is correct.

The correct answer is: 6

Question **26**
Correct
Mark 1.00 out of 1.00

Flag question

Question text
The nominal voltage encountered in a single family residential dwelling is :

Select one:

a.
120/208 volts

b.
120/240 volts

c.
115/230 volts

d.
110/220 volts

Feedback
Your answer is correct.

The correct answer is: 120/240 volts

Question **27**
Correct
Mark 1.00 out of 1.00

Flag question

Question text
A motor disconnecting means for a gas appliance in a single family dwelling shall be within sight of and within a maximum of _____ meters of the motor ?

Select one:

a.
3

b.
6

c.
9

d.
5

Feedback
Your answer is correct.

The correct answer is: 9

Question **28**
Incorrect
Mark 0.00 out of 1.00

Flag question

Question text
A class B gas fitter is not permitted to perform which one of the following types for electrical work ?

Select one:

a.
Install class 2 low voltage thermostat control wiring

b.
Remove and replace with new an existing gas appliance where the full load currents of the two units are identical

c.
Remove and replace with new an identical integral replacement part for the electrical control of a gas appliance

d.
Install 120 volt wiring from the circuit panelboard to the furnace

Feedback
Your answer is incorrect.

The correct answer is: Install 120 volt wiring from the circuit panelboard to the furnace

Question **29**
Correct
Mark 1.00 out of 1.00

Flag question

Question text
All interior gas piping which may become energized , required a copper bonding conductor that is not smaller than which one of the following wire sizes ?

Select one:

a.
10

b.
4

c.
8

d.
6

Feedback
Your answer is correct.

The correct answer is: 6

Question **30**
Correct
Mark 1.00 out of 1.00

Flag question

Question text
In order to change the rotation (direction) of a three phase motor you must perform which one of the following procedures ?

Select one:

a.
Change the supply voltage to 208 V

b.
Change the connection of any two phase conductors

c.
Change the supply voltage to 240 V

d.
Change the neutral with any one phase conductor

Feedback

Your answer is correct.

The correct answer is: Change the connection of any two phase conductors

Question **31**
Correct
Mark 1.00 out of 1.00

Flag question

Question text
The branch circuit conductors and control equipment of each manually started motor shall be provided with overload protection when the motor is rated above which one of the following horsepower ?

Select one:

a.
3/4 horsepower

b.
1 horsepower

c.
1/6 horsepower

d.
1/2 horsepower

Feedback
Your answer is correct.

The correct answer is: 1 horsepower

Question **32**
Correct
Mark 1.00 out of 1.00

Flag question

Question text

The maximum allowable voltage drop on a feeder or branch circuit is which one of the following percentages ?

Select one:

a.
6 **%**

b.
4 **%**

c.
3 **%**

d.
5 **%**

Feedback

Your answer is correct.

The correct answer is: 3 **%**

Question **33**

Incorrect

Mark 0.00 out of 1.00

Flag question

Question text

What is the de-ration factor if there are 5 current carrying power conductors in a raceway ?

Select one:

a.
60 **%**

b.
100 **%**

c.
80 **%**

d.

70 **%**

Feedback
Your answer is incorrect.

The correct answer is: 80 **%**

Question **34**
Correct
Mark 1.00 out of 1.00

Flag question

Question text
What is the ampacity of three No 8 R90 copper conductors in a raceway if it passes through a room with an ambient temperature of 75 degree C ?

Select one:

a.
110 amps

b.
55 amps

c.
27.5 amps

d.
17.2 amps

Feedback
Your answer is correct.

The correct answer is: 27.5 amps

Question **35**
Correct
Mark 1.00 out of 1.00

Flag question

Question text

Does all interior metal gas piping which may become energized , required bonding to a grounding conductor ?

Select one:

a.
Only if there are di-electric fittings on the gas line

b.
Only if the gas line is copper tube

c.
Yes in every case

d.
Only if there is no copper water service to bond to

Feedback

Your answer is correct.

The correct answer is: Yes in every case

Question **36**

Correct

Mark 1.00 out of 1.00

Flag question

Question text

For a multi-phase system having one wire common to all phases , the conductor to be grounded shall be :

Select one:

a.
the grounding conductor

b.
the ungrounded conductor

c.
the identified neutral conductor

d.
the identified conductor

Feedback
Your answer is correct.

The correct answer is: the identified neutral conductor

Question **37**
Incorrect
Mark 0.00 out of 1.00

Flag question

Question text
When relocating a furnace it is acceptable to extend the circuit wiring by using

Select one:

a.
An approved extension cord

b.
Approved wire connector without a junction box

c.
Approved wire connectors inside a junction box

d.
Any flexible cord that meets the ampacity rating

Feedback
Your answer is incorrect.

The correct answer is: Approved wire connectors inside a junction box

Question **38**
Correct
Mark 1.00 out of 1.00

Flag question

Question text

In using non-metallic sheathed cable it shall be secured by straps or other approved devices within _____ mm of every box.

Select one:

a.
150 mm

b.
300 mm

c.
250 mm

d.
600 mm

Feedback

Your answer is correct.

The correct answer is: 300 mm

Question **39**

Correct

Mark 1.00 out of 1.00

Flag question

Question text

Where conductors issue from armoured cable they shall be protected from abrasion by acceptable :

Select one:

a.
Bushings

b.
Locking nuts

c.
Electrical tape

d.
Wire nut connectors

Feedback
Your answer is correct.

The correct answer is: Bushings

Question **40**
Incorrect
Mark 0.00 out of 1.00

Flag question

Question text
What is the minimum distance NMSC must be kept from heating ducts ?

Select one:

a.
25 mm

b.
50 mm

c.
150 mm

d.
13 mm

Feedback
Your answer is incorrect.

The correct answer is: 25 mm

Question **41**
Correct
Mark 1.00 out of 1.00

Flag question

Question text

What is the minimum distance between the edge of a wooden member and a NMD90 cable running through it ?

Select one:

a.
13 mm

b.
50 mm

c.
25 mm

d.
32 mm

Feedback

Your answer is correct.

The correct answer is: 32 mm

Question **42**

Correct

Mark 1.00 out of 1.00

Flag question

Question text

When installing NMD90 on a wall what is the closest distance it can come to the floor level without protection ?

Select one:

a.
1 m

b.
2 m

c.
2.2 m

d.
1.5 m

Feedback
Your answer is correct.

The correct answer is: 1.5 m

Question **43**
Incorrect
Mark 0.00 out of 1.00

Flag question

Question text
A class 2 circuit shall have its output limited to :

Select one:

a.
24 V amperes

b.
100 V amperes

c.
50 V amperes

d.
1000 V amperes

Feedback
Your answer is incorrect.

The correct answer is: 100 V amperes

Question **44**
Incorrect
Mark 0.00 out of 1.00

Flag question

Question text

A 30 amp over-current device protecting a circuit will require which one of the following sizes of copper bonding conductor ?

Select one:

a.
16 AWG

b.
12 AWG

c.
10 AWG

d.
14 AWG

Feedback

Your answer is incorrect.

The correct answer is: 12 AWG

Question **45**

Correct

Mark 1.00 out of 1.00

Flag question

Question text

The maximum output rating for a class 2 transformer is which one of the following VA ?

Select one:

a.
100 VA

b.
24 VA

c.
40 VA

d.

1000 VA

Feedback
Your answer is correct.

The correct answer is: 100 VA

Question **46**
Correct
Mark 1.00 out of 1.00

Flag question

Question text
Which one of the following types of materials shall not be used as an anchoring insert for securing electrical equipment to masonry or concrete ?

Select one:

a.
Wood

b.
Lead

c.
Lead alloy

d.
Plastic

Feedback
Your answer is correct.

The correct answer is: Wood

Question **47**
Correct
Mark 1.00 out of 1.00

Flag question

Question text

The installation of an electrical circuit for a forced air furnace in a single family dwelling shall comply with which of the following requirements ?

Select one:

a.
It shall be provided with a suitable disconnecting means

b.
It shall be obtained from a single branch circuit

c.
It shall comply with all of the requirements

d.
It shall have a calculated load which shall not exceed the ampere rating of the circuit

Feedback

Your answer is correct.

The correct answer is: It shall comply with all of the requirements

Question **48**

Correct

Mark 1.00 out of 1.00

Flag question

Question text

Where nonmetallic sheathed cable is run in proximity to heating ducts, the transfer of heat to the cable shall be minimized by means of an air space of at least which one of the following distances ?

Select one:

a.
75 mm

b.
50 mm

c.
25 mm

d.
60 mm

Feedback
Your answer is correct.

The correct answer is: 25 mm

Question **49**
Incorrect
Mark 0.00 out of 1.00

Flag question

Question text
All electric power for a heating unit and associated equipment shall be obtained from :

Select one:

a.
A single branch circuit supplying only extra lights and plugs in the furnace room

b.
there are no restrictions as long as the conductor is Type LVT

c.
A single branch circuit for that purpose only

d.
A three wire conductor one for the furnace and the other for lights and plugs

Feedback
Your answer is incorrect.

The correct answer is: A single branch circuit for that purpose only

Question **50**
Correct
Mark 1.00 out of 1.00

Flag question

Question text
The maximum supply voltage of a safety control circuit for a gas appliance shall not exceed

Select one:

a.
24 volts

b.
240 volts

c.
120 volts

d.
300 volts

Feedback
Your answer is correct.

The correct answer is: 120 volts

Question **51**
Correct
Mark 1.00 out of 1.00

Flag question

Question text
Overload protection for automatically started motors is not required when the motor is _____ or less and part of an assembly equipped with other safety controls that protect the motor from damage due to stalled rotor current.

Select one:

a.
1/4 HP

b.
1/2 HP

c.
3/4 HP

d.
1 HP

Feedback
Your answer is correct.

The correct answer is: 1 HP

Question **52**
Incorrect
Mark 0.00 out of 1.00

Flag question

Question text
A motor disconnect should be installed within what distance from a furnace ?

Select one:

a.
9 meters

b.
3 meters

c.
5 meters

d.
1 meters

Feedback
Your answer is incorrect.

The correct answer is: 9 meters

Question **53**
Correct
Mark 1.00 out of 1.00

Flag question

Question text
How would you change the rotation of a three-phase motor ?

Select one:

a.
Change leg A with C

b.
Change leg B with C

c.
All the options are correct

d.
Change leg A with B

Feedback
Your answer is correct.

The correct answer is: All the options are correct

Question **54**
Correct
Mark 1.00 out of 1.00

Flag question

Question text
What is the nominal voltage found in a single family dwelling ?

Select one:

a.
110/220 volts

b.
150/300 volts

c.
120/240 volts

d.

115/230 volts

Feedback

Your answer is correct.

The correct answer is: 120/240 volts

Question **55**

Correct

Mark 1.00 out of 1.00

Flag question

Question text

What is the maximum voltage drop in a branch circuit supplying a furnace ?

Select one:

a.
None of the option is correct

b.
3 %

c.
5 %

d.
4 %

Feedback

Your answer is correct.

The correct answer is: 3 %

Question **56**

Correct

Mark 1.00 out of 1.00

Flag question

Question text

What is the minimum copper wire size and type to supply a 120 volts 1/2 HP single phase motor in a 25 degree C ambient temperature ?

Select one:

a.
No 14 TW 75

b.
No 12 RW 75

c.
No 14 TW

d.
No 12 NMD90

Feedback

Your answer is correct.

The correct answer is: No 14 TW 75

Question **57**

Correct

Mark 1.00 out of 1.00

Flag question

Question text

What is the circuit breaker amperage for a 120 V 1/2 HP single phase motor in a 25 degree C ambient temperature ?

Select one:

a.
20 amps

b.
30 amps

c.
25 amps

d.
15 amps

Feedback
Your answer is correct.

The correct answer is: 20 amps

Question **58**
Incorrect
Mark 0.00 out of 1.00

Flag question

Question text
When an armour cable's conductors are exposed at the end of the cable for splicing they shall be protected from the sharp metal edges by which one of the following items ?

Select one:

a.
A clamp

b.
A dielectric fitting

c.
A connector

d.
An insulated bushing

Feedback
Your answer is incorrect.

The correct answer is: An insulated bushing

Finish review
◄ Conductors and OPD Sizing

Which method or source of energy may be used to generate electricity?

Select one:

a.
Heat

b.
Chemical reaction

c.
All are correct

d.
Friction

Feedback

Your answer is correct.

The correct answer is: All are correct

Question **2**

Incorrect

Mark 0.00 out of 1.00

Flag question

Question text

Static electricity Answer is

normally a concern during humid weather.

Feedback

During humid weather the electrons can flow through the damp air and the objects will become electrically neutral.

Question **3**

Incorrect

Mark 0.00 out of 1.00

Flag question

Question text

What is the name of the effect that refers to heat being applied to two dissimilar metals or alloys that are joined together that results in current flow?

Select one:

a.
Thermoelectric effect

b.
Bimetal effect

c.
Dissimilar effect

d.
Setback effect

Feedback

Your answer is incorrect.

The correct answer is: Thermoelectric effect

Question **4**

Partially correct

Mark 0.50 out of 1.00

Flag question

Question text

What are the two practical applications for thermocouples? Select all that apply.

Select one or more:

a.
To act as a temperature sensor

b.
To provide light for maintenance purposes

c.
To ignite pilot gas with hot surface

d.
To generate extra low voltage

Feedback

Your answer is partially correct.

You have correctly selected 1.
The correct answers are: To generate extra low voltage, To act as a temperature sensor

Question **5**
Correct
Mark 1.00 out of 1.00

Flag question

Question text

What action occurs when a battery produces electricity?

Select one:

a.
Triboelectric effect

b.
Piezoelectricity

c.
Electrochemistry

d.
Thermoelectric effect

Feedback

Your answer is correct.

Electrochemistry is produced when a liquid electrolyte is mixed with other materials to form a paste which allows communication between the anode and the cathode. The cell can then be used in any position and handled as though it was actually dry. Therefore a battery is sometime referred to as a dry cell.

The correct answer is: Electrochemistry

Question **6**

Partially correct

Mark 0.50 out of 1.00

Flag question

Question text

What type of appliance is likely to have a piezoelectric igniter? Select all that apply.

Select one or more:

a.
Barbeque

b.
Hot water tank

c.
Patio heater

d.
Fireplace

Feedback

Your answer is partially correct.

You have correctly selected 2.
The correct answers are: Hot water tank, Patio heater, Fireplace, Barbeque

Question **7**

Partially correct

Mark 0.33 out of 1.00

Flag question

Question text

What are the three common types of materials used to make magnets? Select all that apply.

Select one or more:

a.
Silver

b.
Aluminum

c.
Copper

d.
Cobalt

e.
Nickle

f.
Iron

Feedback

Your answer is partially correct.

You have correctly selected 1.
The two types of magnets are, Permanent Magnets and Electromagnets.

The correct answers are: Cobalt, Iron, Nickle

Question **8**
Correct
Mark 1.00 out of 1.00

Flag question

Question text

If the current is increased through a conductor, what effect would this have on the strength of the magnetic field surrounding the conductor?

Select one:

a.
It will increase

b.
It will decrease

c.
It will stay the same

d.
It will fluctuate

Feedback

Your answer is correct.

The correct answer is: It will increase

Question **9**

Correct

Mark 1.00 out of 1.00

Flag question

Question text

What method of producing voltage was discovered by Faraday that linked electricity and magnetism?

Select one:

a.

Galvanic series

b.
Electromagnetic induction

c.
Three phase power

d.
Periodic table

Feedback

Your answer is correct.

The correct answer is: Electromagnetic induction

Question **10**
Partially correct
Mark 0.67 out of 1.00

Flag question

Question text

Identify advantages that alternating current has over direct current. Select all that apply.

Select one or more:

a.
AC converts easily to DC

b.
Generators naturally make AC power

c.
Batteries naturally make AC power

d.
AC power is constant in its polarity

e.
AC voltage can be changed with a transformer

Feedback

Your answer is partially correct.

You have correctly selected 2.
The correct answers are: AC voltage can be changed with a transformer, Generators naturally make AC power, AC converts easily to DC

Question **11**
Incorrect
Mark 0.00 out of 1.00

Flag question

Question text

What are the two standard methods of connecting the single-phase winding of generators to form three-phase circuits?

Select one:

a.
Alternating and direct

b.
Series and parallel

c.
Wye and Delta

d.
Looped and gridded

Feedback

Your answer is incorrect.

The correct answer is: Wye and Delta

Question **12**
Incorrect
Mark 0.00 out of 1.00

Flag question

Question text

Which part of the light spectrum are CdS photo conductive cells most sensitive?

Select one:

a.
Infra red

b.
Ultra violet

c.
Plasma

d.
Visible light

Feedback

Your answer is incorrect.

The correct answer is: Visible light

Question **13**

Incorrect

Mark 0.00 out of 1.00

Flag question

Question text

What is done to produce a semi conductor with an unbalanced electrical charge for use in a Photovoltaic cell?

Select one:

a.
Connect to a light dependent resistor

b.
Coated with oxidized silver

c.
Doped or chemically modified

d.
Enclosed in a photo tube

Feedback

Your answer is incorrect.

The correct answer is: Doped or chemically modified

Question **14**
Correct
Mark 1.00 out of 1.00

Flag question

Question text

When referring to the transfer of electricity due to friction; what is the ranking system called that list the order in which materials gain or lose electrons?

Select one:

a.
Galvanic series

b.
Triboelectric series

c.
Thermoelectric effect

d.
Electrochemistry effect

Feedback

Your answer is correct.

The correct answer is: Triboelectric series

Question **15**

Incorrect

Mark 0.00 out of 1.00

Flag question

Question text

Which device in a combustion safety circuit makes use of the “Thermoelectric effect”?

Select one:

a.
Flame rollout switch

b.
High limit

c.
Transformer

d.
Thermocouple

Feedback

Your answer is incorrect.

The correct answer is: Thermocouple

Question **16**

Incorrect

Mark 0.00 out of 1.00

Flag question

Question text

What is the maximum voltage produced by a thermopile?

Select one:

a.
20 mV

b.
250 mV

c.
30 mV

d.
750 mV

Feedback

Your answer is incorrect.

The correct answer is: 750 mV

Question **17**

Correct

Mark 1.00 out of 1.00

Flag question

Question text

What is considered the positive terminal in a dry (voltaic) cell?

Select one:

a.
Porous paper

b.
Carbon rod

c.
Zinc container

d.

Electrolyte paste

Feedback

Your answer is correct.

The correct answer is: Carbon rod

Question **18**

Correct

Mark 1.00 out of 1.00

Flag question

Question text

What type of electricity is produced when pressure is applied to certain crystalline materials such as quartz?

Select one:

a.
Electrochemistry

b.
Thermoelectricity

c.
Photoelectricity

d.
Piezoelectricity

Feedback

Your answer is correct.

The correct answer is: Piezoelectricity

Question **19**

Correct

Mark 1.00 out of 1.00

Flag question

Question text

Which pole of a magnet do the lines of force enter?

Select one:

a.
West

b.
North

c.
South

d.
East

Feedback

Your answer is correct.

The correct answer is: South

Question **20**

Incorrect

Mark 0.00 out of 1.00

Flag question

Question text

What determines the strength of the magnetic field surrounding a conductor?

Select one:

a.
Amperage

b.
Temperature

c.
Resistance

d.
Voltage

Feedback

Your answer is incorrect.

The correct answer is: Amperage

Question **21**
Correct
Mark 1.00 out of 1.00

Flag question

Question text

Which rule is used to identify the direction of the magnetic lines of flux around a wire?

Select one:

a.
Seebeck Effect

b.
Bernoulli's Principle

c.
Left Hand Rule

d.
Right Hand Rule

Feedback

Your answer is correct.

The correct answer is: Left Hand Rule

Question **22**

Incorrect

Mark 0.00 out of 1.00

Flag question

Question text

What is required to generate electricity by electromagnetic induction?

Select one:

a.
Friction

b.
Temperature

c.
Pressure

d.
Motion

Feedback

Your answer is incorrect.

The correct answer is: Motion

Question **23**

Incorrect

Mark 0.00 out of 1.00

Flag question

Question text

Which of the following would not increase the voltage produced by electromagnetic induction ?

Select one:

a.
Increasing the strength of the magnetic field

b.
Increasing the temperature of the magnet and the coil

c.
Increasing the number of turns of wire in the coil

d.
Increasing the speed of the relative motion between the coil and the magnet

Feedback

Your answer is incorrect.

The correct answer is: Increasing the temperature of the magnet and the coil

Question **24**

Correct

Mark 1.00 out of 1.00

Flag question

Question text

Which device transfers the voltage from the slip rings in a generator to the conductors ?

Select one:

a.
Armature

b.
Stator

c.
Rotor

d.
Brushes

Feedback

Your answer is correct.

The correct answer is: Brushes

Question **25**

Correct

Mark 1.00 out of 1.00

Flag question

Question text

What is the typical cycle frequency for AC electrical power in North America?

Select one:

a.
30 Hertz

b.
60 Hertz

c.
10 Hertz

d.
120 Hertz

Feedback

Your answer is correct.

The correct answer is: 60 Hertz

Question **26**

Correct

Mark 1.00 out of 1.00

Flag question

Question text

How many degrees apart are the coils in a three phase generator?

Select one:

a.
30

b.
45

c.
90

d.
120

Feedback

Your answer is correct.

The correct answer is: 120

Question **27**

Incorrect

Mark 0.00 out of 1.00

Flag question

Question text

What is another name for a CdS photoconductive cell?

Select one:

a.
Light dependent resistor

b.
Phototube

c.
Rectifier

d.
Light emitting diode

Feedback

Your answer is incorrect.

The correct answer is: Light dependent resistor

Question **28**
Incorrect
Mark 0.00 out of 1.00

Flag question

Question text

Identify the electrical generating device illustrated below.

Select one:

a.
Photoemissive cell

b.
Photoconductive cell

c.
Thermoelectric cell

d.
Photovoltaic cell

Feedback

Your answer is incorrect.

The correct answer is: Photovoltaic cell

Finish review

◄ Generating Electricity

Jump to...

Why is high voltage more dangerous to human shock than low voltage?

Select one or more:

a.
Low voltage lasts only a split second

b.
High voltage cant be grounded

c.
Low voltage blows breakers

d.
High voltage over comes resistance

Feedback

Your answer is correct.

The correct answer is: High voltage over comes resistance

Question **2**

Correct

Mark 1.00 out of 1.00

Flag question

Question text

Why is water dangerous when working around electrical power?

Select one:

a.
Water increases the voltage

b.
Water gives a path for stray current to the ground

c.
Water reacts chemically with some types of conductors

d.
Water decreases the resistance of the body

Feedback

Your answer is correct.

The correct answer is: Water decreases the resistance of the body

Question **3**

Correct

Mark 1.00 out of 1.00

Flag question

Question text

What is the first thing that should be done when an un-conscious shock victim is discovered?

Select one:

a.
Check for breathing

b.
Determine if the cause of shock is still present

c.
Check for a pulse

d.
Start CPR

Feedback

Your answer is correct.

The correct answer is: Determine if the cause of shock is still present

Question **4**

Correct

Mark 1.00 out of 1.00

Flag question

Question text

List the factors that effect the severity of electrical shock to a body?

Select one:

a.
Ventricular cavitation occurs within the body

b.
The heart muscles cannot move and severe burns

c.
The body goes into a Cardiopulmonary state

d.
The heart beats at an excessive rate and muscles begin to vibrate

Feedback

Your answer is correct.

The correct answer is: The heart muscles cannot move and severe burns

Question **5**

Incorrect

Mark 0.00 out of 1.00

Flag question

Question text

What is the lowest amperage during electrical shock that will likely result in cardiac arrest?

Select one:

a.
above 200 amps

b.
above 200 mA

c.
above 1 amp

d.
above 2 amps

Feedback

Your answer is incorrect.

The correct answer is: above 200 mA

Question **6**

Partially correct

Mark 0.67 out of 1.00

Flag question

Question text

What are variables that effect the severity of electrical shock on the body? select all that apply.

Select one or more:

a.
Duration of exposure to the current

b.
Temperature of the surrounding atmosphere

c.

Path of current through the body

d.
Amount of sweat or moisture on the skin

Feedback

Your answer is partially correct.

You have correctly selected 2.
The correct answers are: Path of current through the body, Amount of sweat or moisture on the skin, Duration of exposure to the current

The Gas Fitter's responsibility starts at the:

Select one:

a.

inlet side of the meter

b.

outlet of the meter

c.

inlet side of the service regulator

d.

outlet side of the service regulator

Feedback

Your answer is incorrect.

The correct answer is: outlet of the meter

Question **2**
Correct

Mark 1.00 out of 1.00

Flag question

Question text

Which one of the following must sign the notification of installation or alteration, (call for inspection), the:

Select one:

a.

general contractor, or their registered representative

b.

gas contractor

c.

authorized agent for the gas contractor

d.

gas fitter

Feedback

Your answer is correct.

The correct answer is: gas fitter

Question **3**

Correct

Mark 1.00 out of 1.00

Flag question

Question text

Where gas is leaking from any part of a gas utility supply system containing gas, a gas fitter shall immediately:

Select one:

a.

dial 911 and evacuate all residents in that area

b.

all of the options

c.

extinguish all flames and sources of ignition in the vicinity of the installation

d.

rope off the area and notify the gas company to make the necessary repairs

Feedback

Your answer is correct.

The correct answer is: all of the options

Question **4**

Correct

Mark 1.00 out of 1.00

Flag question

Question text

A domestic appliance service license was once classified as what class of license?

Select one:

A

B

C

D

Feedback

Your answer is correct.

11 Gas & Safety Regulations

The correct answer is: C

Question **5**

Correct

Mark 1.00 out of 1.00

Flag question

Question text

An applicant for a Class "A" Gas Fitter's license shall have held a Class "B" Gas Fitter's license for a period of:

Select one:

a.

1 year

b.

2 years

c.

6 months

d.

5 years

Feedback

Your answer is correct.

The correct answer is: 2 years

Question **6**

Correct

Mark 1.00 out of 1.00

Flag question

Question text

The limitation of a ***Class "B"*** license, for gas pressures in a gas system is:

Select one:

a.

no limitation on gas pressure

b.

60 PSIG (400 kPa)

c.

5 PSIG (35 kPa)

d.

up to and including 2 PSIG (15 kPa)

Feedback

Your answer is correct.

The correct answer is: no limitation on gas pressure

Question **7**

Correct

Mark 1.00 out of 1.00

Flag question

Question text

A Class "B" Gas Fitter's license shall entitle the holder, while employed by a gas contractor, to install and alter:

Select one:

a.

any gas system

b.

power burner units up to and including 400,000 Btu/h (117 kW)

c.

approved appliances with draft hoods up to and including 750,000 Btu/h (220 kW)

d.

any approved atmospheric appliances with draft hoods, with no limitations on input

Feedback

Your answer is correct.

The correct answer is: power burner units up to and including 400,000 Btu/h (117 kW)

Question **8**

Correct

Mark 1.00 out of 1.00

Flag question

Question text

At the completion of the installation of a gas system, the gas fitter must leave a gas fitter's tag on the gas pipe at the point of entry into the building. The information included on this tag shall include which of the following items?

Select one:

a.

The gas fitter's name and date

b.

The gas fitter's name, date, certificate of qualification number and type of appliance

c.

The gas fitter's name, date and phone number

d.

The gas fitter's name, date and certificate of qualification number

Feedback

Your answer is correct.

The correct answer is: The gas fitter's name, date, certificate of qualification number and type of appliance

Question **9**

Correct

Mark 1.00 out of 1.00

Flag question

Question text

Which of the following abbreviations does not represent an agency approved as a gas appliance testing and certification agency for B.C.?

Select one:

a.

ULC

b.

UL

c.

CSA

d.

CGA

Feedback

Your answer is correct.

The correct answer is: CGA

Question **10**

Incorrect

Mark 0.00 out of 1.00

Flag question

Question text

Before installing an approved used gas appliance, it must be inspected and determined to be safe by:

Select one:

a.

an appliance supplier

b.

a testing agency

c.

a gas fitter

d.

a gas inspector

Feedback

Your answer is incorrect.

The correct answer is: a gas fitter

Question **11**

Incorrect

Mark 0.00 out of 1.00

Flag question

Question text

To be a gas contractor requires the applicant to:

Select one:

a.

provide proof of a performance bond

b.

have a current business license

c.

employ a Class "A" gas fitter

d.

first be a gas fitter himself/herself

Feedback

Your answer is incorrect.

The correct answer is: provide proof of a performance bond

Question **12**

Correct

Mark 1.00 out of 1.00

Flag question

Question text

A person who connects gas to an appliance shall:

Select one:

a.

verify inputs and make any necessary adjustments

b.

inform user of correct operation

c.

all of the options

d.

ensure appliances work according to manufacturer's specifications

Feedback

Your answer is correct.

The correct answer is: all of the options

Question **13**

Incorrect

Mark 0.00 out of 1.00

Flag question

Question text

Who may not apply for a permit to install gas appliances?

Select one:

a.

A homeowner to do his/her own gas fitting in their home

b.

A gas fitter/contractor

c.

A gas fitter

d.

A farmer to do his/her own gas fitting in their home

Feedback

Your answer is incorrect.

The correct answer is: A gas fitter

Question **14**

Correct

Mark 1.00 out of 1.00

Flag question

Question text

Who is responsible for maintaining gas-fired appliances in a rental suite?

Select one:

a.

The tenant of the building

b.

The manager of the building

c.

The owner of the building

d.

The janitor of the building

Feedback

Your answer is correct.

The correct answer is: The owner of the building

Question **15**

Correct

Mark 1.00 out of 1.00

Flag question

Question text

To convert a propane appliance to natural gas, the installer must:

Select one:

a.

first request permission from the safety manager

b.

be a Class "A" gas fitter

c.

follow manufacturer's instructions for the conversion

d.

have it inspected before it can be used

Feedback

Your answer is correct.

The correct answer is: follow manufacturer's instructions for the conversion

Question **16**
Correct

Mark 1.00 out of 1.00

Flag question

Question text
The limits of flammability of propane gas in air are approximately:

Select one:

a.

10% to 45%

b.

4.6% to 14%

c.

2.4% to 9.5%

d.

5% to 15.3%

Feedback
Your answer is correct.

The correct answer is: 2.4% to 9.5%

Question **17**
Correct

Mark 1.00 out of 1.00

Flag question

Question text

Name the limits of flammability for natural gas in air:

Select one:

a.

6% to 12%

b.

14% to 24%

c.

4% to 14%

d.

4% to 10%

Feedback

Your answer is correct.

The correct answer is: 4% to 14%

Question **18**

Correct

Mark 1.00 out of 1.00

Flag question

Question text

Natural gas is composed mainly of:

Select one:

a.

mixture of air and gas

b.

propane

c.

methane

d.

butane

Feedback

Your answer is correct.

The correct answer is: methane

Question **19**

Correct

Mark 1.00 out of 1.00

Flag question

Question text

The relative density of propane vapour is approximately:

Select one:

a.

0.8

b.

1.5

c.

2

d.

0.6

Feedback

Your answer is correct.

The correct answer is: 1.5

Question **20**

Correct

Mark 1.00 out of 1.00

Flag question

Question text

What is the calorific value of Butane gas?

Select one:

a.

2500 Btu/Cu.Ft. (0.733 kW/cu.ft)

b.

3200 Btu/Cu.Ft. (0.938 kW/cu.ft)

c.

1200 Btu/Cu.Ft. (0.352 kW/cu.ft)

d.

1050 Btu/Cu.Ft. (0.308 kW/cu.ft)

Feedback

Your answer is correct.

The correct answer is: 3200 Btu/Cu.Ft. (0.938 kW/cu.ft)

Question **21**

Correct

Mark 1.00 out of 1.00

Flag question

Question text

What surface on a propane storage container transfers heat and affects the vaporization rate?

Select one:

a.

The entire wetted surface of the container

b.

The entire surface including the top and bottom

c.

Only the surface that directly faces the sun and receives direct radiation

d.

The entire surface not including the top or bottom

Feedback

Your answer is correct.

The correct answer is: The entire wetted surface of the container

Question **22**

Incorrect

Mark 0.00 out of 1.00

Flag question

Question text

One cubic foot of natural gas at standard temperature and pressure will produce how many kW of heat when it is completely burned?

Select one:

a.

2520 kW

b.

0.293 kW

c.

1,000 kW

d.

10.35 kW

Feedback

Your answer is incorrect.

The correct answer is: 0.293 kW

Question **23**

Correct

Mark 1.00 out of 1.00

Flag question

Question text

One cubic foot of propane vapor will produce approximately how many kW when completely burned?

Select one:

a.

26kW

b.

88 980 kW

c.

0.7323 kW

d.

35 310 kW

Feedback

Your answer is correct.

The correct answer is: 0.7323 kW

Question **24**

Correct

Mark 1.00 out of 1.00

Flag question

Question text

The heat generated by the complete combustion of a unit of fuel is commonly referred to as its:

Select one:

a.

combustion value

b.

calorific value

c.

distillation value

d.

flash value

Feedback

Your answer is correct.

The correct answer is: calorific value

Question **25**

Correct

Mark 1.00 out of 1.00

Flag question

Question text

Which of the following gases has the highest calorific value?

Select one:

a.

Carbon Monoxide

b.

Natural Gas

c.

Butane

d.

Propane

Feedback

Your answer is correct.

The correct answer is: Butane

Question **26**

Correct

Mark 1.00 out of 1.00

Flag question

Question text

One cubic meter of propane vapor will produce:

Select one:

a.

88 275 Btu

b.

112 992 Btu

c.

35 310 Btu

d.

25 000 Btu

Feedback

Your answer is correct.

The correct answer is: 88 275 Btu

Question **27**

Correct

Mark 1.00 out of 1.00

Flag question

Question text

Absolute pressure is equal to:

Select one:

a.

the atmospheric pressure divided by the gauge pressure

b.

the atmospheric pressure multiplied by the gauge pressure

c.

the gauge pressure minus the atmospheric pressure

d.

the atmospheric pressure plus the gauge pressure

Feedback

Your answer is correct.

The correct answer is: the atmospheric pressure plus the gauge pressure

Question **28**

Correct

Mark 1.00 out of 1.00

Flag question

Question text

Natural gas must be preheated to approximately ____ °F before it will ignite.

Select one:

a.

3500

b.

1200

c.

1000

d.

212

Feedback

Your answer is correct.

The correct answer is: 1200

Question **29**

Correct

Mark 1.00 out of 1.00

Flag question

Question text

The flame temperature of natural gas is approximately _____°F.

Select one:

a.

3500

b.

1200

c.

212

d.

1000

Feedback

Your answer is correct.

The correct answer is: 3500

Question **30**

Correct

Mark 1.00 out of 1.00

Flag question

Question text

The chemical formula for natural gas is:

Select one:

a.

C4H10

b.

CH4

c.

C2H6

d.

C3H8

Feedback

Your answer is correct.

The correct answer is: CH4

Question **31**
Correct

Mark 1.00 out of 1.00

Flag question

Question text
The chemical formula for propane gas is:

Select one:

a.

CH4

b.

C3H8

c.

C4H10

d.

C2H6

Feedback
Your answer is correct.

The correct answer is: C3H8

Question **32**
Correct

Mark 1.00 out of 1.00

Flag question

Question text

Complete combustion of 5 cubic feet of propane gas would produce _____ kW of heat.

Select one:

a.

3.66

b.

26

c.

12 500

d.

1.46

Feedback

Your answer is correct.

(5 cu.ft X 2500 BTU/cu.ft) ÷ 3412

The correct answer is: 3.66

Question **33**

Correct

Mark 1.00 out of 1.00

Flag question

Question text

20 imperial gallons of liquid propane would weigh ____ pounds.

Select one:

a.

10

b.

20

c.

200

d.

100

Feedback

Your answer is correct.

20IMP X 10 lbs/IMP of H2O X 0.51 (specific gravity of LP)

The correct answer is: 100

Question **34**

Incorrect

Mark 0.00 out of 1.00

Flag question

Question text

1 cubic meter of liquid propane would yield how many Btu's?

Select one:

a.

2 500

b.

88 275

c.

23 834 250

d.

675 000

Feedback

Your answer is incorrect.

1 cu.m liquid = 270 cu.m vapor

270 cu.m **X** 35.31 cu.ft/cu.m **X** 2500 BTU/cu.ft

The correct answer is: 23 834 250

Question **35**

Correct

Mark 1.00 out of 1.00

Flag question

Question text

The calorific value (heat value) of natural gas is approximately:

Select one:

a.

3,200 Btu/cu.ft 3 (33.1 kW/m3)

b.

500 Btu/cu.ft (5.17 kW/m3)

c.

1,000 Btu/cu.ft (1 0.34 kW/m3)

d.

2,500 Btu/cu.ft (25.86 kW/m3)

Feedback

Your answer is correct.

The correct answer is: 1,000 Btu/cu.ft (1 0.34 kW/m3)

Question **36**

Correct

Mark 1.00 out of 1.00

Flag question

Question text

One cubic meter of natural gas will produce _____ BTU

Select one:

a.

35.310

b.

35 310

c.

37.075

d.

37 075

Feedback

Your answer is correct.

The correct answer is: 35 310

Question **37**

Incorrect

Mark 0.00 out of 1.00

Flag question

Question text

A piping system is pressure tested with air to 50 PSIG. The volume of the piping is 100 cu.ft and the temperature of the air in the pipe is 78F. The next day the temperature of the air in the pipe is 45F. What will the new pressure gauge reading be?

Select one:

a.

27.5 psig

b.

60.76 psig

c.

46.03 psig

d.

84.32 psig

Feedback

Your answer is incorrect.

The correct answer is: 46.03 psig

Question **38**

Correct

Mark 1.00 out of 1.00

Flag question

Question text

The specific gravity of a gas is the:

Select one:

a.

heat in the gas

b.

weight of a gas as compared to an equal volume of air

c.

volume of the gas

d.

weight of a gas as compared to an equal volume of water

Feedback

Your answer is correct.

The correct answer is: weight of a gas as compared to an equal volume of air

Question **39**

Incorrect

Mark 0.00 out of 1.00

Flag question

Question text

Which part of air is involved in the combustion process?

Select one:

a.

Carbon Dioxide

b.

Moisture content

c.

Oxygen

d.

Nitrogen

Feedback

Your answer is incorrect.

The correct answer is: Oxygen

Question **40**

Incorrect

Mark 0.00 out of 1.00

Flag question

Question text

A primary cause of incomplete combustion when the appliance is firing at the correct input is:

Select one:

a.

lack of gas

b.

lack of air

c.

too much gas

d.

too much air

Feedback

Your answer is incorrect.

The correct answer is: lack of air

Question **41**

Incorrect

Mark 0.00 out of 1.00

Flag question

Question text

The identifying products of incomplete combustion are:

Select one:

a.

heat, carbon monoxide and water vapor

b.

carbon monoxide & aldehydes

c.

heat, carbon dioxide, carbon monoxide and nitrogen

d.

heat, carbon dioxide and carbon monoxide

Feedback

Your answer is incorrect.

The correct answer is: carbon monoxide & aldehydes

Question **42**

Correct

Mark 1.00 out of 1.00

Flag question

Question text

How many cubic feet of combustion air are required for every cubic foot of propane gas?

Select one:

a.

16 Cu.Ft. (0.45 m3)

b.

25 Cu. Ft. (0.71 m3)

c.

32 Cu.Ft. (0.91 m3)

d.

10 Cu.Ft. (0.28 m3)

Feedback

Your answer is correct.

The correct answer is: 25 Cu. Ft. (0.71 m3)

Question **43**

Correct

Mark 1.00 out of 1.00

Flag question

Question text

What percentage of the air is oxygen?

Select one:

a.

40%

b.

80%

c.

60%

d.

20%

Feedback

Your answer is correct.

The correct answer is: 20%

Question **44**

Incorrect

Mark 0.00 out of 1.00

Flag question

Question text

Which example would be most likely to produce carbon monoxide?

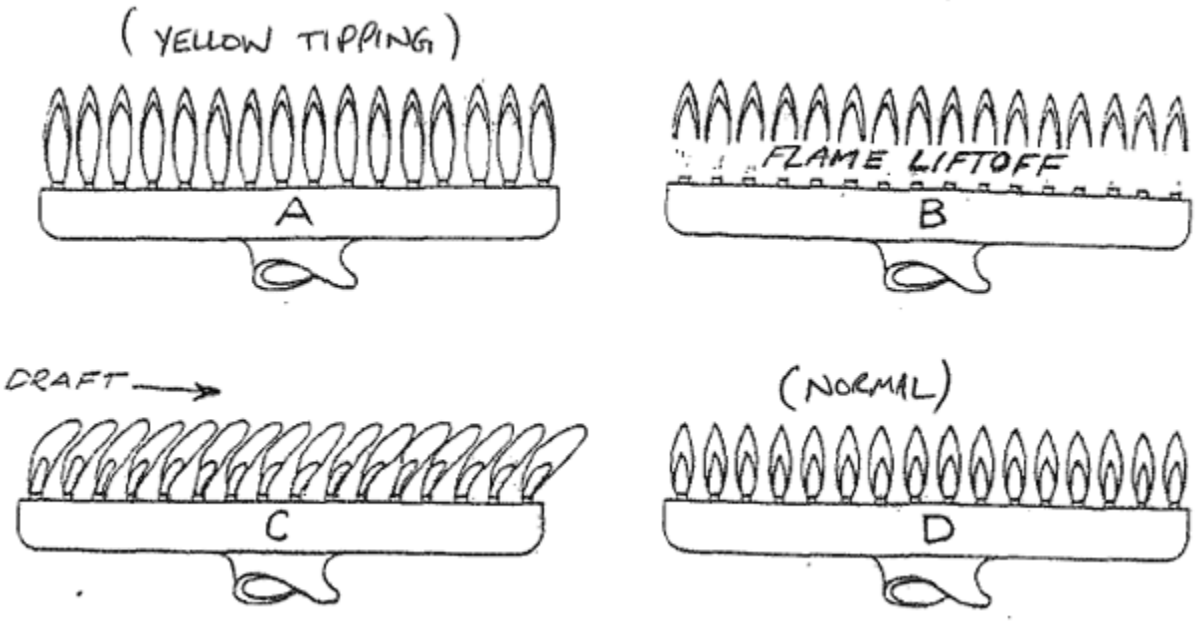

Select one:

B

A

C

D

Feedback

Your answer is incorrect.

The correct answer is: B

Question **45**

Incorrect

Mark 0.00 out of 1.00

Flag question

Question text

The "ultimate" CO_2 percent obtainable with combustion of natural gas is closest to:

Select one:

a.

4%

b.

20%

c.

12%

d.

50%

Feedback

Your answer is incorrect.

The correct answer is: 12%

Question **46**

Incorrect

Mark 0.00 out of 1.00

Flag question

Question text

Providing there is excess air, as the the CO_2 level in the products of combustion decreases, the combustion efficiency:

Select one:

a.

increases

b.

is unaffected

c.

decreases

d.

remains constant

Feedback

Your answer is incorrect.

The correct answer is: decreases

Question **47**

Incorrect

Mark 0.00 out of 1.00

Flag question

Question text

If a combustion analysis indicates carbon monoxide, a gas fitter should:

Select one:

a.

install a power venter

b.

check air supply, clock appliance, and clean burners

c.

decrease secondary air and increase input

d.

turn appliance regulator adjusting screw clockwise and decrease primary air

Feedback

Your answer is incorrect.

The correct answer is: check air supply, clock appliance, and clean burners

Question **48**

Incorrect

Mark 0.00 out of 1.00

Flag question

Question text

"Barber'' burners use the _____ principle.

Select one:

a.

atmospheric inshot

b.

flame impingement

c.

ribbon port

d.

flame retention

Feedback

Your answer is incorrect.

The correct answer is: flame retention

Question **49**

Correct

Mark 1.00 out of 1.00

Flag question

Question text

If an appliance with an atmospheric burner is found to have a 7.5% CO2 level and the input is correct, the gas fitter should:

Select one:

a.

tape over some of the air openings on the appliance (to reduce excess air)

b.

do nothing more- 7.5% is acceptable

c.

install different burners from a higher efficiency appliance

d.

increase input

Feedback

Your answer is correct.

The correct answer is: do nothing more- 7.5% is acceptable

Question **50**

Correct

Mark 1.00 out of 1.00

Flag question

Question text

Which example below would be most likely to cause incomplete combustion?

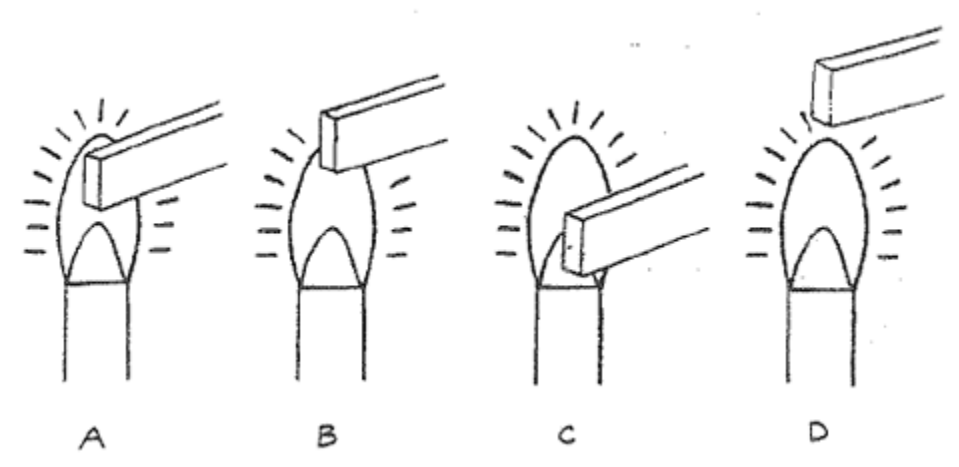

Select one:

A

B

C

D

Feedback

Your answer is correct.

The correct answer is: C

Question **51**

Incorrect

Mark 0.00 out of 1.00

Flag question

Question text

Flame lift-off can be corrected by:

Select one:

a.

increasing pipe size to appliance

b.

adding more secondary air

c.

decreasing primary air

d.

turning the regulator adjusting screw clockwise

Feedback

Your answer is incorrect.

The correct answer is: decreasing primary air

Question **52**

Correct

Mark 1.00 out of 1.00

Flag question

Question text

The low-pressure area in the venturi of an atmospheric burner is created by:

Select one:

a.

the low gas pressure in the manifold

b.

the opening in the air shutter which allows primary air to enter

c.

the high velocity gas flow through the orifice

d.

the low velocity gas flow through the orifice

Feedback

Your answer is correct.

The correct answer is: the high velocity gas flow through the orifice

Question **53**

Incorrect

Mark 0.00 out of 1.00

Flag question

Question text

A volume of natural gas is burned to create 2,000,000 Btuh of heat. The volume of carbon dioxide produced would be:

Select one:

a.

10 000 cu.ft

b.

4000 cu.ft

c.

2000 cu.ft

d.

20 000 cu.ft

Feedback

Your answer is incorrect.

2 000 000 BTU ÷ 1000 BTU/cu.ft = 2000 ct.ft x 1

The correct answer is: 2000 cu.ft

Question **54**

Correct

Mark 1.00 out of 1.00

Flag question

Question text

The rapid combination of fuel with oxygen resulting in a release of heat would be a good definition of:

Select one:

a.

combustion

b.

relative heat value

c.

flash point

d.

calorific value

Feedback

Your answer is correct.

The correct answer is: combustion

Question **55**

Correct

Mark 1.00 out of 1.00

Flag question

Question text

A product of incomplete combustion which is colorless, odorless, tasteless and extremely toxic is:

Select one:

a.

carbon dioxide

b.

carbon monoxide

c.

argon

d.

aldehydes

Feedback

Your answer is correct.

The correct answer is: carbon monoxide

Question **56**

Incorrect

Mark 0.00 out of 1.00

Flag question

Question text

When you burn a hydrocarbon fuel, the products of complete combustion contain:

Select one:

a.

CO + N2 + H20

b.

C02+CO+N2

c.

CO + C02 + H20

d.

C02 + N2 + H20

Feedback

Your answer is incorrect.

The correct answer is: C02 + N2 + H20

Question **57**

Correct

Mark 1.00 out of 1.00

Flag question

Question text

Primary air would be defined as that air:

Select one:

a.

premixed with the gas by the supplier

b.

surrounding the gas flame

c.

drawn in at the burner inlet before ignition

d.

heated and circulated by the appliance

Feedback

Your answer is correct.

The correct answer is: drawn in at the burner inlet before ignition

Question **58**

Correct

Mark 1.00 out of 1.00

Flag question

Question text

During the combustion of natural gas the combustion products in the vent are cooled down below 120°F. Which of the following conditions will occur?

Select one:

a.

The flue products will condense and corrode the vent

b.

The quantity of carbon dioxide will increase

c.

The quantity of CO will increase

d.

The carbon in the flue gas will condense and plug the vent with soot

Feedback

Your answer is correct.

The correct answer is: The flue products will condense and corrode the vent

Question **59**

Incorrect

Mark 0.00 out of 1.00

Flag question

Question text

Which of the following conditions would cause floating flames?

Select one:

a.

A blocked vent cap

b.

A blocked flue outlet

c.

Low gas pressure

d.

Too much primary air

Feedback

Your answer is incorrect.

The correct answer is: A blocked flue outlet

Question **60**

Incorrect

Mark 0.00 out of 1.00

Flag question

Question text

In the illustration, the valve shown is:

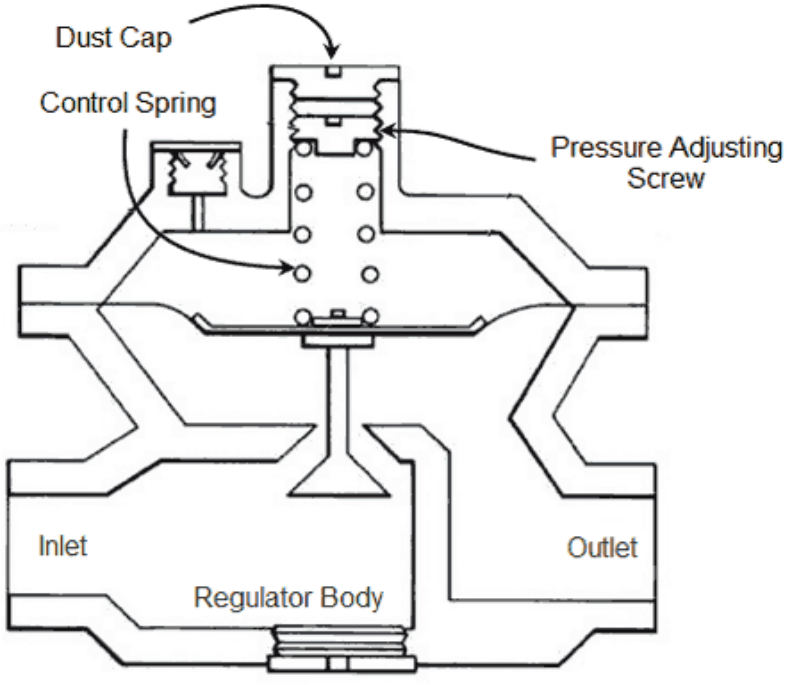

Select one:

a.

normally open

b.

normally closed

c.

electrically actuated by the thermostat

d.

not recommended for low-pressure gas systems

Feedback

Your answer is incorrect.

The correct answer is: normally open

Question **61**

Correct

Mark 1.00 out of 1.00

Flag question

Question text

The restricting element of a regulator is the:

Select one:

a.

valve disc

b.

limiting orifice

c.

diaphragm

d.

spring

Feedback

Your answer is correct.

The correct answer is: valve disc

Question **62**

Correct

Mark 1.00 out of 1.00

Flag question

Question text

The minimum inlet pressure to a 2 PSIG (14 kPa) piping system sized with the current piping tables requires a regulator to reduce the pressure to 7 inches w.c. (1.75 kPa). The regulator is located some distance from the meter. Which of the following would you select as the inlet pressure to the regulator?

Select one:

a.

5 PSIG (34 kPa)

b.

0.5 PSIG (3.5 kPa)

c.

7 in.wc (1.75 kPa)

d.

2.5 PSIG (17 kPa)

Feedback

Your answer is correct.

Table A.4 2PSI - 1.5PSI

The correct answer is: 0.5 PSIG (3.5 kPa)

Question **63**

Incorrect

Mark 0.00 out of 1.00

Flag question

Question text

A gas pressure regulator, when installed outdoors, should have the vent:

Select one:

a.

piped away to a safe location, pointing upward

b.

opening pointing down

c.

opening pointing in a horizontal position to a safe location

d.

restricted with an approved device

Feedback

Your answer is incorrect.

B149.1

5.2.2.3 / 5.5.6

The correct answer is: opening pointing down

Question **64**
Incorrect

Mark 0.00 out of 1.00

Flag question

Question text
Using the image below, identify the item indicated by the green arrow.

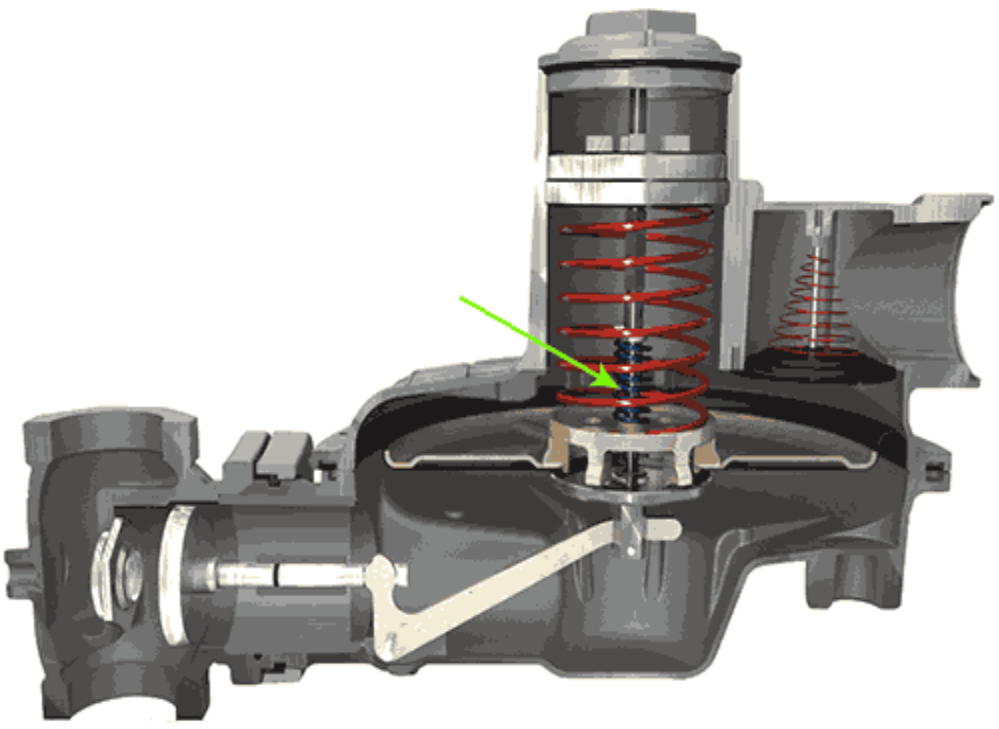

Select one:

a.

relief valve spring

b.

gas outlet

c.

loading spring

d.

vent limiter spring

Feedback

Your answer is incorrect.

The correct answer is: relief valve spring

Question **65**

Correct

Mark 1.00 out of 1.00

Flag question

Question text

An undersized vent pipe on a regulator may cause the:

Select one:

a.

regulator to go into a hunting condition

b.

pilot safety to fail

c.

restricting element to stay fully closed

d.

restricting element to stay fully open

Feedback

Your answer is correct.

The correct answer is: regulator to go into a hunting condition

Question **66**

Incorrect

Mark 0.00 out of 1.00

Flag question

Question text

Using the image, identify the following item indicated by the green arrow.

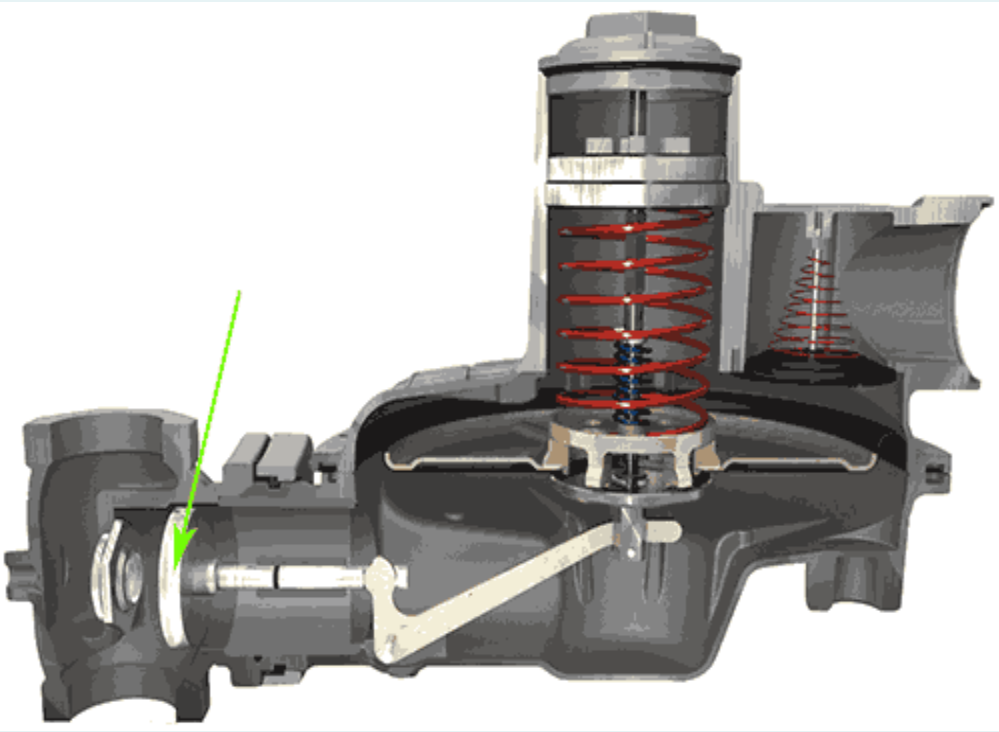

Select one:

a.

inlet

b.

bellows

c.

relief valve

d.

valve disc

Feedback

Your answer is incorrect.

The correct answer is: valve disc

Question **67**

Correct

Mark 1.00 out of 1.00

Flag question

Question text

Using the image, identify the following item.

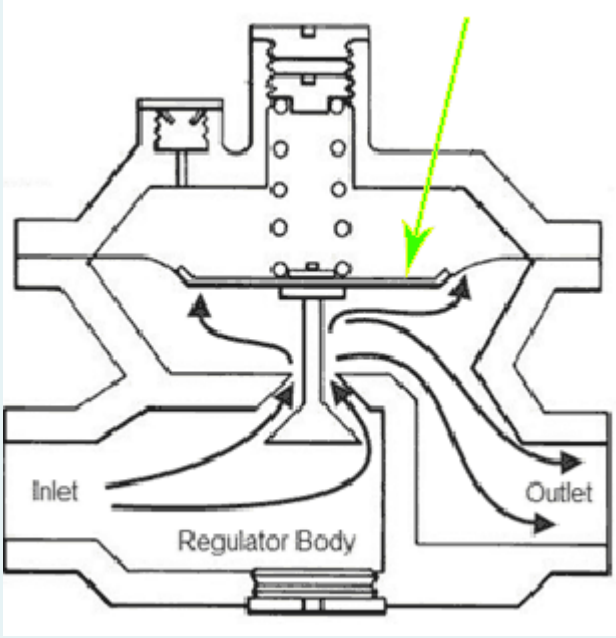

Select one:

a.

diaphragm

b.

surge arrestor

c.

loading element

d.

regulator tower separation

Feedback

Your answer is correct.

The correct answer is: diaphragm

Question **68**

Incorrect

Mark 0.00 out of 1.00

Flag question

Question text

What type of regulator is shown in the image?

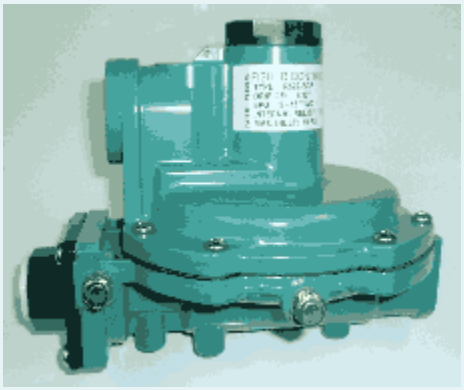

Select one:

a.

Two stage propane regulator

b.

Utility supplied meter regulator, for low pressure

c.

Industrial appliance regulator

d.

First stage propane regulator

Feedback

Your answer is incorrect.

The correct answer is: Two stage propane regulator

Question **69**
Incorrect

Mark 0.00 out of 1.00

Flag question

Question text
When installing an appliance regulator the vent opening is completely blocked. This will cause the regulator to:

Select one:

a.

regulate the gas flow at the incorrect pressure

b.

regulate the gas flow at the correct pressure

c.

go into a hunting condition

d.

remain permanently closed

Feedback
Your answer is incorrect.

The correct answer is: regulate the gas flow at the incorrect pressure

Question **70**
Incorrect

Mark 0.00 out of 1.00

Flag question

Question text

If the orifice in a regulator is too small:

Select one:

a.

the restricting element will fully open and not regulate downstream pressure

b.

the regulator will go into a hunting condition

c.

the regulator will open and close rapidly causing disc damage

d.

the pressure on the downstream side of the regulator will become too high

Feedback

Your answer is incorrect.

The correct answer is: the restricting element will fully open and not regulate downstream pressure

Question **71**

Correct

Mark 1.00 out of 1.00

Flag question

Question text

On a combination gas valve the regulator controls:

Select one:

a.

only the pilot gas pressure

b.

only the main burner gas pressure

c.

the inlet pressure to the gas valve

d.

the size of the pilot burner

Feedback

Your answer is correct.

The correct answer is: only the main burner gas pressure

Question **72**

Correct

Mark 1.00 out of 1.00

Flag question

Question text

A two-stage propane regulator would typically be set for:

Select one:

a.

first stage 15 inches w.c., second stage 11 inches w.c.

b.

first stage 2 PSIG, second stage 7 inches w.c.

c.

first stage 10 PSIG, second stage 11 inches w.c ..

d.

first stage 5 PSIG, second stage 14 inches w.c.

Feedback

Your answer is correct.

The correct answer is: first stage 10 PSIG, second stage 11 inches w.c ..

Question **73**

Incorrect

Mark 0.00 out of 1.00

Flag question

Question text

Increasing the spring force in an appliance regulator will:

Select one:

a.

damage the diaphragm

b.

increase the pilot flame

c.

increase the manifold pressure

d.

decrease the manifold pressure

Feedback

Your answer is incorrect.

The correct answer is: increase the manifold pressure

Question **74**

Correct

Mark 1.00 out of 1.00

Flag question

Question text

A pressure regulator is said to be in equilibrium when the:

Select one:

a.

opening force of the diaphragm is equal to the closing force of the spring

b.

opening force of the spring is equal to the closing force of the downstream pressure

c.

opening force of the diaphragm is equal to the closing force of the orifice

d.

opening force of the spring is equal to the closing force of the upstream pressure

Feedback

Your answer is correct.

The correct answer is: opening force of the spring is equal to the closing force of the downstream pressure

Question **75**

Correct

Mark 1.00 out of 1.00

Flag question

Question text

The loading force in most regulators is provided by the:

Select one:

a.

diaphragm

b.

spring

c.

disc

d.

inlet gas pressure

Feedback

Your answer is correct.

The correct answer is: spring

Question **76**

Correct

Mark 1.00 out of 1.00

Flag question

Question text

_____ is the term which describes outlet pressure which is lower than set point pressure during flow conditions.

Select one:

a.

Lockup

b.

Boost

c.

Droop

d.

Rise

Feedback

Your answer is correct.

The correct answer is: Droop

Question **77**

Correct

Mark 1.00 out of 1.00

Flag question

Question text

When the inlet supply pressure to a line pressure regulator exceeds 1/2 PSIG, it shall:

Select one:

a.

be bypassed

b.

be of a positive shut-off type

c.

have a leak-limiting orifice

d.

have a valve located immediately downstream

Feedback

Your answer is correct.

B149.1

5.2.1.4

The correct answer is: be of a positive shut-off type

Question **78**

Correct

Mark 1.00 out of 1.00

Flag question

Question text

If a regulator is installed backwards in a piping system, what is the most likely result?

Select one:

a.

The regulator will open completely

b.

The regulator will close completely

c.

Pressure downstream will rise above set point

d.

No difference- they are non-directional valves

Feedback

Your answer is correct.

The correct answer is: The regulator will close completely

Question **79**

Incorrect

Mark 0.00 out of 1.00

Flag question

Question text

When selecting the components of a service regulator, the required downstream pressure will be determined by:

Select one:

a.

the selection of the restricting element

b.

the selection of the proper body size

c.

the selection of the measuring element

d.

the selection of the loading element

Feedback

Your answer is incorrect.

The correct answer is: the selection of the loading element

Question **80**

Correct

Mark 1.00 out of 1.00

Flag question

Question text

The leak limiting device shown below must be installed as shown in:

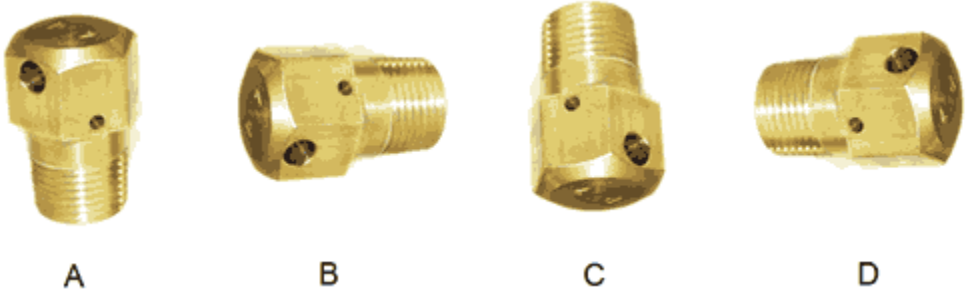

Select one:

A

B

C

D

Feedback

Your answer is correct.

The correct answer is: A

Question **81**

Correct

Mark 1.00 out of 1.00

Flag question

Question text

If a 5 PSIG system regulator has a 3/4 inch vent tapping and the vent line must run 65 feet, what must be done?

Select one:

a.

Use 1 inch pipe for the entire length - make the change at the vent tapping

b.

Use 3/4 inch for the first 50 feet, then increase to 1 inch

c.

Use 3/4 inch pipe for the entire length- you may not change sizes

d.

Use 3/4 inch pipe for the first 20 feet, then increase to 1 inch

Feedback

Your answer is correct.

5.5.4(b)(ii)

The correct answer is: Use 1 inch pipe for the entire length - make the change at the vent tapping

Question **82**

Incorrect

Mark 0.00 out of 1.00

Flag question

Question text

Too many fittings on a vent line could cause:

Select one:

a.

the regulator to "hunt"

b.

the regulator to lock-up

c.

the restricting element to fully close

d.

the restricting element to fully open

Feedback

Your answer is incorrect.

The correct answer is: the regulator to "hunt"

Question **83**

Incorrect

Mark 0.00 out of 1.00

Flag question

Question text

The device illustrated is a/an:

Select one:

a.

zero govenor

b.

two-stage regulator

c.

earthquake valve

d.

pounds-to-inches (line pressure) regulator

Feedback

Your answer is incorrect.

The correct answer is: pounds-to-inches (line pressure) regulator

Question **84**

Correct

Mark 1.00 out of 1.00

Flag question

Question text

The purpose of a pitot tube in a regulator is to:

Select one:

a.

increase upstream pressure during static conditions

b.

keep downstream pressure closer to set point during flow conditions

c.

provide mechanical advantage for positive shut-off

d.

relieve unwanted gases when overpressure occurs

Feedback

Your answer is correct.

The correct answer is: keep downstream pressure closer to set point during flow conditions

Question **85**

Incorrect

Mark 0.00 out of 1.00

Flag question

Question text

If a 5 PSIG line-pressure regulator (with internal relief) was installed in a boiler room, which of the following would be required?

Select one:

a.

It shall be of negative shut-down type

b.

All downstream piping must be Type "K" copper tubing

c.

The vent must be piped to a safe location outdoors

d.

A bypass shall be installed

Feedback

Your answer is incorrect.

The correct answer is: The vent must be piped to a safe location outdoors

Question **86**

Correct

Mark 1.00 out of 1.00

Flag question

Question text

A line pressure regulator operating at 2 PSIG or less shall be exempt from the requirements of Clause 5.2.1.5 (B) when equipped with which of the following?

Select one:

a.

A union on the downstream piping

b.

A negative shut-down system

c.

A vent leak-limiting system

d.

A pitot tube located in an area of high velocity and low pressure

Feedback

Your answer is correct.

B149.1

5.2.2.4 / 5.2.3.1

The correct answer is: A vent leak-limiting system

Question **87**

Correct

Mark 1.00 out of 1.00

Flag question

Question text

The device illustrated is a/an:

Select one:

a.

redundant valve

b.

ball valve

c.

solenoid valve

d.

earthquake valve

Feedback

Your answer is correct.

The correct answer is: earthquake valve

Question **88**

Correct

Mark 1.00 out of 1.00

Flag question

Question text

A forced air furnace through which the circulating air flows in the opposite direction to the flue gas is a/an:

Select one:

a.

counter flow furnace

b.

attic furnace

c.

floor furnace

d.

wall furnace

Feedback

Your answer is correct.

The correct answer is: counter flow furnace

Question **89**

Correct

Mark 1.00 out of 1.00

Flag question

Question text

Identify the correct components indicated by the green arrows in the illustration.

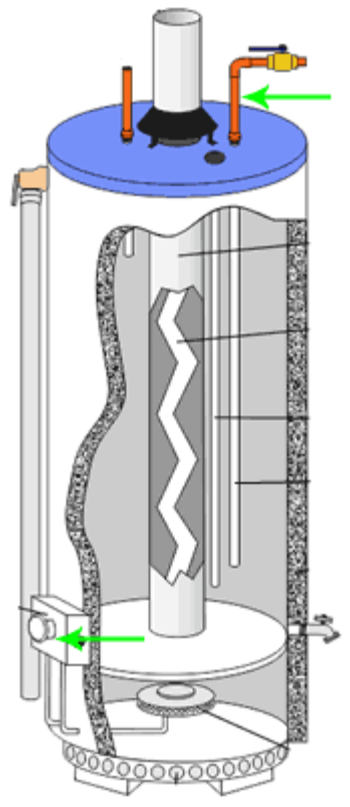

Select one:

a.

outer jacket; hot water pipe

b.

control valve; cold water inlet

c.

draft hood; drain

d.

control valve; hot water outlet

Feedback

Your answer is correct.

The correct answer is: control valve; cold water inlet

Question **90**

Incorrect

Mark 0.00 out of 1.00

Flag question

Question text

The illustration shows four basic kinds of appliances. Identify the correct series of applications and correct names for the appliances:

Select one:

a.

#1 - Power Direct Vent, #2 - Natural Draft, #3 - Power Vented, #4 - Direct Vent

b.

#1 - Natural Draft, #2 - Direct Vent , #3 - Power Vented, #4 - Power Direct Vent

c.

#1 - Natural Draft, #2 - Power Vented, #3 - Direct Vent, #4 - Power Direct Vent

d.

#1 - Direct Vent, #2 - Power Vented, #3 - Natural Draft, #4 - Power Direct Vent

Feedback

Your answer is incorrect.

The correct answer is: #1 - Natural Draft, #2 - Power Vented, #3 - Direct Vent, #4 - Power Direct Vent

Question **91**

Incorrect

Mark 0.00 out of 1.00

Flag question

Question text

Identify the item indicated by the green arrow in the image.

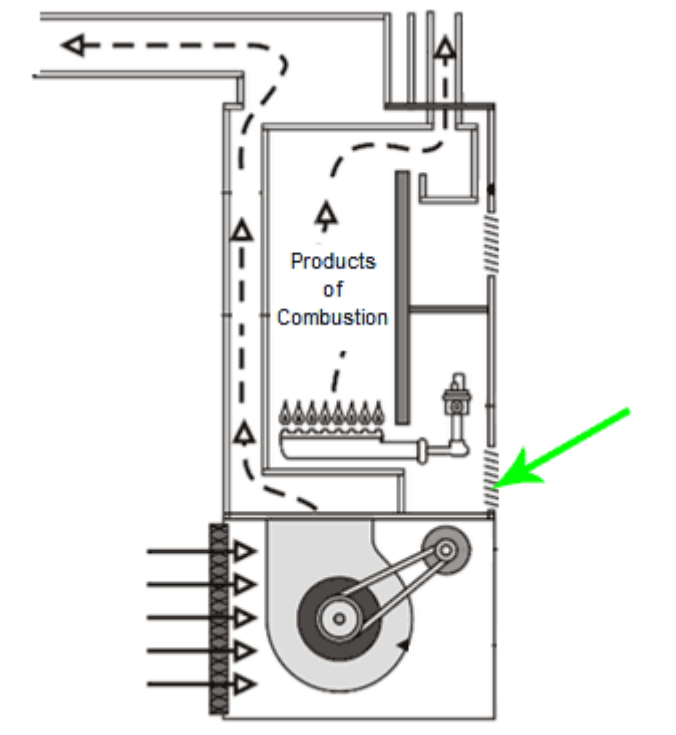

Select one:

a.

ventilation air opening

b.

combustion air opening

c.

ventilation grill

d.

service access

Feedback

Your answer is incorrect.

The correct answer is: combustion air opening

Question **92**

Correct

Mark 1.00 out of 1.00

Flag question

Question text

The basic job of an operating control on a boiler is to:

Select one:

a.

start pump when boiler water gets too cold

b.

energize burner when boiler water gets too hot

c.

energize the burner when boiler water gets too cold

d.

energize burner when boiler water level gets too low

Feedback

Your answer is correct.

The correct answer is: energize the burner when boiler water gets too cold

Question **93**

Incorrect

Mark 0.00 out of 1.00

Flag question

Question text

The fan control on a forced air furnace generally operates on:

Select one:

a.

1000 mV

b.

800 mV

c.

24 V

d.

110 V

Feedback

Your answer is incorrect.

The correct answer is: 110 V

Question **94**

Correct

Mark 1.00 out of 1.00

Flag question

Question text

A residential gas range with fixed orifices can be converted from propane to natural gas by:

Select one:

a.

adjusting the burner spoiler screw

b.

adjusting the primary air shutter

c.

change orifices and manifold pressure

d.

increasing or decreasing the house line pressure

Feedback

Your answer is correct.

The correct answer is: change orifices and manifold pressure

Question **95**
Incorrect

Mark 0.00 out of 1.00

Flag question

Question text

A direct fired make-up air heater (DFMAH):

Select one:

a.

has a draft hood

b.

has a barometric draft regulator

c.

does not have a heat exchanger

d.

requires a stainless steel heat exchanger

Feedback

Your answer is incorrect.

The correct answer is: does not have a heat exchanger

Question **96**
Correct

Mark 1.00 out of 1.00

Flag question

Question text

The field conversion of a new gas appliance from the type of gas specified on the rating plate to another type of gas is:

Select one:

a.

prohibited -the conversion of new appliances is unacceptable

b.

only permitted when the conversion is done by the supplier

c.

allowed, if the conversion is done by a gas fitter and the rating plate is permanently marked for the gas being used

d.

permitted - only if authorized by the local gas inspector

Feedback

Your answer is correct.

B149.1

4.5.4

The correct answer is: allowed, if the conversion is done by a gas fitter and the rating plate is permanently marked for the gas being used

Question **97**

Correct

Mark 1.00 out of 1.00

Flag question

Question text

A residential gas range with universal orifices can be converted from propane to natural gas by:

Select one:

a.

turning the orifice cap clockwise and change the regulator setting

b.

adjusting the primary air shutters

c.

turning the orifice cap counter-clockwise and change the regulator setting

d.

decreasing the manifold pressure

Feedback

Your answer is correct.

The correct answer is: turning the orifice cap counter-clockwise and change the regulator setting

Question **98**

Correct

Mark 1.00 out of 1.00

Flag question

Question text

The temperature setting of the high limit on a forced air furnace shall not exceed:

Select one:

a.

350F

b.

250F

c.

160F

d.

200F

Feedback

Your answer is correct.

B149.1

7.8.6(b)

The correct answer is: 250F

Question **99**

Incorrect

Mark 0.00 out of 1.00

Flag question

Question text

On some older forced air furnaces, an air temperature sensing device is used to operate both the:

Select one:

a.

fan control and the rollout switch

b.

fan control and the damper motor

c.

fan control and the limit switch

d.

fan control and the thermostat

Feedback

Your answer is incorrect.

The correct answer is: fan control and the limit switch

Question **100**

Incorrect

Mark 0.00 out of 1.00

Flag question

Question text

A valve used to automatically shut-off the gas supply on a fire suppression system shall be located:

Select one:

a.

under the protected area (exhaust canopy)

b.

upstream of the manual shut-off valve for the water heater

c.

near the largest input appliance

d.

outside of the protected area

Feedback

Your answer is incorrect.

B149.1

4.19.2

The correct answer is: outside of the protected area

Question **101**

Incorrect

Mark 0.00 out of 1.00

Flag question

Question text

If the dip tube in a hot water tank breaks at the top of the tank, the most likely result would be:

Select one:

a.

the incoming cold water will mix with the hot water leaving producing tepid or inconsistant delivery temperature

b.

the water at the top of the tank will always be cold

c.

the water would be too hot

d.

the tank could collapse if exposed to a backsiphonage condition

Feedback

Your answer is incorrect.

The correct answer is: the incoming cold water will mix with the hot water leaving producing tepid or inconsistant delivery temperature

Question **102**

Correct

Mark 1.00 out of 1.00

Flag question

Question text

What is the minimum vent distance for a commercial gas clothes dryer from a fresh air intake?

Select one:

a.

20 Ft. (6.09 m)

b.

3 Ft. (0.91 m)

c.

30 Ft. (9.14 m)

d.

10 Ft. (3.05 m)

Feedback

Your answer is correct.

B149.1

7.4.4

The correct answer is: 10 Ft. (3.05 m)

Question **103**

Correct

Mark 1.00 out of 1.00

Flag question

Question text

An industrial site boiler room contains an appliance rated at 1,800,000 Btu/h (527.22 kW) (power burner, not equipped with a draft hood) and a boiler rated at 950,000 Btu/h (278.25 kW) (equipped with a barometer damper). Ventilation air is being delivered to the units through a hole-in-the-wall covered by wire mesh having a free air allowance of 80%. The

wire mesh should have a minimum area of _____(round up or down to nearest whole number):

Select one:

a.

25 square inches (161 cm2)

b.

17.5 square inches (113 cm2)

c.

14 square inches (90 cm2)

d.

20 square inches (129 cm2)

Feedback

Your answer is correct.

The correct answer is: 25 square inches (161 cm2)

Question **104**

Incorrect

Mark 0.00 out of 1.00

Flag question

Question text

What is the minimum diameter of the combustion air requirement for a single family dwelling complying with code clauses 8.2.1 which has a 100,000 Btu/h (29.30 kW) furnace, and a 36,000 Btu/h (10.54 kW) hot water tank if both appliances are equipped with a draft control device and the length of the duct in 27 feet?

Select one:

a.

6-inch

b.

4-inch

c.

3-inch

d.

5-inch

Feedback

Your answer is incorrect.

Complies with 8.2.1(a)(b)

The correct answer is: 6-inch

Question **105**

Correct

Mark 1.00 out of 1.00

Flag question

Question text

A single family dwelling, complying with 8.2.1 (a) or (b), has a furnace with an input of 135,000 Btu/h (39.54 kW) and a hot water tank rated at 40,000 Btu/h (17.58 kW). Both appliances are equipped with draft control devices. If the duct is 35 feet (10.67 m) in developed length, the acceptable round duct equivalent is:

Select one:

a.

6 inches (15 cm)

b.

8 inches (20 cm)

c.

10 inches (25 cm)

d.

7 inches (18 cm)

Feedback

Your answer is correct.

25 inch sq = 6inch

increase 1 pipe size 7inch

The correct answer is: 7 inches (18 cm)

Question **106**

Correct

Mark 1.00 out of 1.00

Flag question

Question text

A boiler room contains the following equipment:

1 - 3,000,000 Btu/h (878.85 kW) appliance (barometric control)

2- 300,000 Btu/h (87.89 kW) hot water tanks (draft hoods)

1 -10,000,000 Btu/h (2,929.50 kW) boiler (barometric control)

1 - 2,000,000 Btu/h (585.90 kW) duct heater (no draft control)

Calculate the grille area for combustion air supply if the grilles efficiency is 75% (round up or down to nearest whole number):

Select one:

a.

1,635-inch2

b.

1,410-inch2

c.

1,480-inch2

d.

1,575-inch2

Feedback

Your answer is correct.

The correct answer is: 1,480-inch2

Question **107**

Correct

Mark 1.00 out of 1.00

Flag question

Question text

A gas-fired appliance equipped with a draft hood is rated for 90,000 Btu/h (26.36 kW). The total air required for complete combustion is:

Select one:

a.

90 CFH (2.54 m3)

b.

900 CFH (25.49 m3)

c.

2,700 CFH (76.46 m3)

d.

1,350 CFH (38.23 m3)

Feedback

Your answer is correct.

The correct answer is: 2,700 CFH (76.46 m3)

Question **108**

Correct

Mark 1.00 out of 1.00

Flag question

Question text

A single family dwelling complying with 8.2.1 (a) or (b) is equipped with a boiler and a hot water tank with a total input of 140,000 Btu/h (41 kW). Calculate the diameter of a round combustion air duct if it is only 12 feet (3.66 m) long (both units have draft hoods):

Select one:

a.

3 inch (7.62 cm) diameter

b.

4 inch (1 0.16 cm) diameter

c.

5 inch (12.7 cm) diameter

d.

6 inch (15.24 cm) diameter

Feedback

Your answer is correct.

The correct answer is: 5 inch (12.7 cm) diameter

Question **109**

Correct

Mark 1.00 out of 1.00

Flag question

Question text

A commercial building has a hot water boiler equipped with a draft control device with an input of 3,250,000 Btu/h (951.82 kW). The combustion air opening is a hole-in-the-wall covered by a 50% free air grill. The area of the grill required for combustion air is (round up or down to nearest whole number):

Select one:

a.

244 square inches (1,57 4 cm2)

b.

607 square inches (3,916 cm2)

c.

109 square inches (703 cm2)

d.

163 square inches (1,051 cm2)

Feedback

Your answer is correct.

The correct answer is: 607 square inches (3,916 cm2)

Question **110**

Incorrect

Mark 0.00 out of 1.00

Flag question

Question text

A boiler has in input of 200,000 Btu/h (58.58 kW), what is the volume of air required for theoretical combustion:

Select one:

a.

200 cubic feet (5.66 m3)

b.

2,000 cubic feet (53.63 m3)

c.

6,000 cubic feet (169.90 m3)

d.

1,000 cubic feet (28.32 m3)

Feedback

Your answer is incorrect.

The correct answer is: 2,000 cubic feet (53.63 m3)

Question **111**

Incorrect

Mark 0.00 out of 1.00

Flag question

Question text

In a direct vent appliance, the air for combustion is:

Select one:

a.

Drawn in from openings in the bottom of the appliance

b.

Drawn in from the outside to the combustion chamber

c.

Drawn in from an opening in the front of the appliance

d.

Drawn in through the open glass doors on the appliance

Feedback

Your answer is incorrect.

The correct answer is: Drawn in from the outside to the combustion chamber

Question **112**

Incorrect

Mark 0.00 out of 1.00

Flag question

Question text

A boiler without a draft control device is fired to an input of 3,000,000 Btuh. What volume of air would be required if being supplied by a combustion air fan?

Select one:

a.

90 000 CFH

b.

45 000 CFH

c.

30 000 CFH

d.

3 000 CFH

Feedback

Your answer is incorrect.

The correct answer is: 90 000 CFH

Question **113**

Incorrect

Mark 0.00 out of 1.00

Flag question

Question text

Size the combustion air supply for a residential building complying with Clause 8.2.1 (a) & (b). The residence has a 140,000 Btuh mid-efficient furnace with no draft control and a 60,000 Btuh hot water tank with draft control. The ductwork runs 40 feet horizontally from the mechanical room.

Select one:

a.

5 in.

b.

3 in.

c.

6 in.

d.

4 in.

Feedback

Your answer is incorrect.

60MBH ==> T.8.1 ==> 11 sq in 4 inch

200MBH ==> T.8.2 ==> 14 sq in 5 inch

Increase 1 pipe size 6 inch

The correct answer is: 6 in.

Question **114**
Incorrect

Mark 0.00 out of 1.00

Flag question

Question text
Calculate the openings required for a mechanical room located within a leaky structure. The mechanical room has a natural draft, atmospheric boiler rated at 175,000 Btuh and a 75,000 Btuh natural draft unit heater. The volume of the structure is 15,000 ft3 and the openings are to be covered with an 80% mesh (pick closest answer):

Select one:

a.

36 sq.in

b.

45 sq.in

c.

312.5 sq.in

d.

250 sq. in

Feedback
Your answer is incorrect.

B149.1

8.2.6

250MBH / 80 = 312.5 sq.in

The correct answer is: 312.5 sq.in

Question **115**

Not answered

Marked out of 1.00

Flag question

Question text

Calculate the size of openings required for a 1,750,000 Btuh natural draft boiler and a 750,000 Btuh boiler with a power burner. The openings are to have louvers with a 60% free area (pick closest answer):

Select one:

a.

combustion air: 221 sq. in. -ventilation air: 22 sq. in.

b.

combustion air: 369 sq. in. -ventilation air: 37 sq. in.

c.

combustion air: 139 sq. in.- ventilation air: 17 sq. in.

d.

combustion air: 416 sq. in. -ventilation air: 42 sq. in.

Feedback

Your answer is incorrect.

The correct answer is: combustion air: 369 sq. in. -ventilation air: 37 sq. in.

Question **116**

Not answered

Marked out of 1.00

Flag question

Question text

Calculate the size of combustion air opening required for a residential building with hot water tank rated at 55,000 Btuh and a furnace rated at 125,000 Btuh, both with draft control. The building does not comply with Clause 8.2.1 (a) or (b). The louvers have a free area of 70% and the volume of the structure is 6,000 cubic feet (pick closest answer):

Select one:

a.

36 sq. in.

b.

41 sq. in.

c.

23 sq. in.

d.

29 sq. in.

Feedback

Your answer is incorrect.

Table 8.3

29 sq.in / 70%

The correct answer is: 41 sq. in.

Question **117**

Not answered

Marked out of 1.00

Flag question

Question text

Calculate the combustion and ventilation air openings for two 250,000 Btuh appliances with no draft control. The openings are to be covered with 80% mesh (pick closest answer):

Select one:

a.

combustion air opening: 21 sq. in.- ventilation air: 12.5 sq. in.

b.

combustion air opening: 134 sq. in.- ventilation air: 12.5 sq. in.

c.

combustion air opening: 21 sq. in. -ventilation air: 2.12 sq. in.

d.

combustion air opening: 134 sq. in. -ventilation air: 13.4 sq. in.

Feedback

Your answer is incorrect.

The correct answer is: combustion air opening: 21 sq. in.- ventilation air: 12.5 sq. in.

Question **118**

Not answered

Marked out of 1.00

Flag question

Question text

Calculate. the combustion air requirements for a 50,000 Btuh hot water tank installed in a structure. The hot water tank has draft control and the building complies with Clause 8.2.1 (a) and (b):

Select one:

a.

No air required

b.

50 inches squared for combustion air

c.

50 inches squared for combustion air and 50 inches squared for ventilation air

d.

100 inches squared of free area

Feedback

Your answer is incorrect.

B149.1

8.2.3 / 8.2.6

The correct answer is: No air required

Question **119**

Not answered

Marked out of 1.00

Flag question

Question text

The volume of air required to achieve theoretical combustion for 50 cubic feet of natural gas is:

Select one:

a.

150 cubic feet

b.

5,000 cubic feet

c.

500 cubic feet

d.

50 cubic feet

Feedback

Your answer is incorrect.

10 to 1 CFH air to CFH Nat gas

The correct answer is: 500 cubic feet

Question **120**

Not answered

Marked out of 1.00

Flag question

Question text

A single family dwelling complying with Clause 8.2.1 (a) has a 220,000 Btuh fan-assist furnace. What is the required diameter of the combustion air duct?

Select one:

a.

6 inch

b.

4 inch

c.

5 inch

d.

7 inch

Feedback

Your answer is incorrect.

No draft control T.8.2

The correct answer is: 5 inch

Question **121**

Correct

Mark 1.00 out of 1.00

Flag question

Question text

When initially setting a barometric draft control for proper operating conditions:

Select one:

a.

the gate must be set so the upper portion of the gate swings in, on an increase in up-draft

b.

the gate must be set at midpoint using weights

c.

you must ensure closure of the gate with a down-draft

d.

the determination of the gate position must be done by instruments (draft gauge)

Feedback

Your answer is correct.

The correct answer is: the determination of the gate position must be done by instruments (draft gauge)

Question **122**

Correct

Mark 1.00 out of 1.00

Flag question

Question text

A down draft through a vent on an atmospheric fired appliance will cause

Select one:

a.

Probable pilot outage and distortion of main flame

b.

Spillage through the front opening of the combustion chamber cutting of secondary air

c.

Spillage of products of combustion at the draft diverter with no effect to burner combustion

d.

Production of carbon monoxide

Feedback

Your answer is correct.

The correct answer is: Spillage of products of combustion at the draft diverter with no effect to burner combustion

Question **123**

Correct

Mark 1.00 out of 1.00

Flag question

Question text

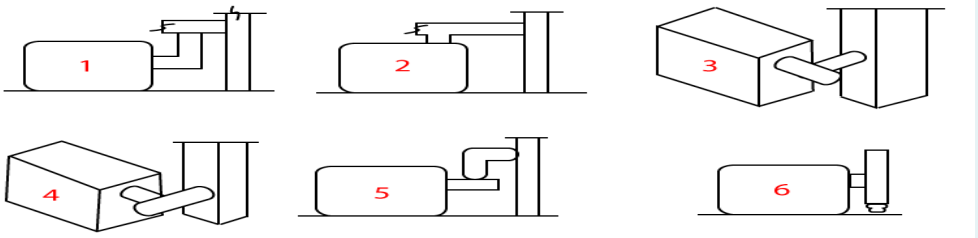

In the below drawing , which three diagrams have the barometric draft control in the correct positions ?

Select one:

a.

1 , 2 , 3

b.

1 , 2 , 4

c.

2 , 4 , 6

d.

1 , 3 , 5

Feedback

Your answer is correct.

The correct answer is: 1 , 2 , 4

Question **124**

Incorrect

Mark 0.00 out of 1.00

Flag question

Question text

If a gas-fired appliance is connected to a chimney which also serves an oil-fired appliance through a separate opening , the gas-fired appliance should be connected at

Select one:

a.

A higher level than the oil-fired appliance

b.

A lower level than the oil-fired appliance

c.

The same level as the oil-fired appliance

d.

None of the options are correct because it contravenes code regulations

Feedback

Your answer is incorrect.

8.12.4

The correct answer is: A higher level than the oil-fired appliance

Question **125**

Incorrect

Mark 0.00 out of 1.00

Flag question

Question text

What is the minimum horizontal clearance from an obstruction to a vent termination without increasing the height ?

Select one:

a.

10 feet (3.66 m)

b.

4 feet (1.22 m)

c.

2 feet (0.6 m)

d.

8 feet (2.44 m)

Feedback

Your answer is incorrect.

8.14.2

The correct answer is: 10 feet (3.66 m)

Question **126**

Correct

Mark 1.00 out of 1.00

Flag question

Question text

The illustration below is of what ?

Select one:

a.

A flex chimney liner

b.

Mid-efficiency direct vent chimney liner

c.

B-vent chimney liner

d.

Specialty venting for high efficiency appliance

Feedback

Your answer is correct.

The correct answer is: A flex chimney liner

Question **127**

Correct

Mark 1.00 out of 1.00

Flag question

Question text

Draft in a vent is created by

Select one:

a.

The outdoor temperature and the area of the vent

b.

Atmospheric pressure and height of the vent

c.

The height and diameter of the vent

d.

The difference in weight of the air outside and the combustion gases inside the vent

Feedback

Your answer is correct.

The correct answer is: The difference in weight of the air outside and the combustion gases inside the vent

Question **128**

Correct

Mark 1.00 out of 1.00

Flag question

Question text

Which of the following appliances can be vented into a common B vent ?

Select one:

a.

Oil-fired boiler **;** gas furnace **;** gas space heater

b.

Gas boiler ; oil furnace; gas space heater ; gas dryer

c.

Gas boiler ; gas furnace ; gas space heater

d.

Gas boiler ; gas furnace ; incinerator ; gas space heater

Feedback

Your answer is correct.

B.149.1

Table 8.5

The correct answer is: Gas boiler ; gas furnace ; gas space heater

Question **129**

Incorrect

Mark 0.00 out of 1.00

Flag question

Question text

A chimney or vent is

Select one:

a.

Any part of a venting system which conveys flue gases

b.

Any vertical section of the venting system, including offsets, which conveys flue gases to the outdoors

c.

Always a Type B-vent or tile-lined chimney

d.

Everything downstream of the draft hood outlet or flue collar

Feedback

Your answer is incorrect.

The correct answer is: Any vertical section of the venting system, including offsets, which conveys flue gases to the outdoors

Question **130**

Incorrect

Mark 0.00 out of 1.00

Flag question

Question text

When can a gas appliance installed in a dwelling unit be connected to a flue serving a solid-fuel fireplace ?

Select one:

a.

When it is connected through a separate opening and above the solid-fuel appliance

b.

A new vent must be installed

c.

Only when the solid fuel fireplace is shut off permanently

d.

Never

Feedback

Your answer is incorrect.

8.12.3

The correct answer is: Only when the solid fuel fireplace is shut off permanently

Question **131**

Incorrect

Mark 0.00 out of 1.00

Flag question

Question text

The type of draft that occurs in the combustion chamber of an appliance equipped with a draft hood is

Select one:

a.

Positive pressure draft

b.

Negative over-fire draft

c.

Neutral over-fire draft

d.

Negative pressure draft

Feedback

Your answer is incorrect.

The correct answer is: Neutral over-fire draft

Question **132**

Correct

Mark 1.00 out of 1.00

Flag question

Question text

The vent is

Select one:

a.

That portion of a venting system designed to convey flue gases directly to the outdoors

b.

The pipe that connects the furnace to the water heater

c.

The vertical section of pipe that connects the furnace to the chimney

d.

The horizontal section of pipe that connects the furnace to the chimney

Feedback

Your answer is correct.

The correct answer is: That portion of a venting system designed to convey flue gases directly to the outdoors

Question **133**

Correct

Mark 1.00 out of 1.00

Flag question

Question text

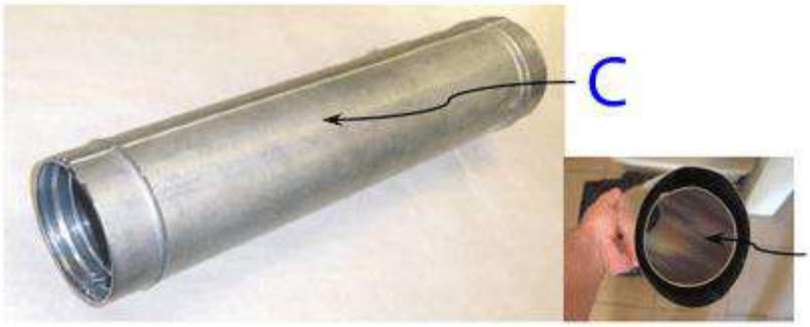

The above diagram is of a commercial B-vent. Please indicate C

Select one:

a.

Air space

b.

Aluminum casing

c.

Galvanized casing

d.

Condensate path

Feedback

Your answer is correct.

The correct answer is: Galvanized casing

Question **134**

Incorrect

Mark 0.00 out of 1.00

Flag question

Question text

The minimum allowable diameter for a round vent is

Select one:

a.

5 inches (12.7 cm)

b.

3 inches (7.62 cm)

c.

2 inches (5.08 cm)

d.

4 inches (10.16 cm)

Feedback

Your answer is incorrect.

8.13.3

The correct answer is: 3 inches (7.62 cm)

Question **135**
Correct

Mark 1.00 out of 1.00

Flag question

Question text

The difference in temperature between the flue gas in the vent and the ambient air is known as the

Select one:

a.

Gross stack temperature

b.

Theoretical temperature

c.

Net stack temperature

d.

Ultimate stack temperature

Feedback

Your answer is correct.

The correct answer is: Net stack temperature

Question **136**
Correct

Mark 1.00 out of 1.00

Flag question

Question text
A single fan-assisted furnace may be

Select one:

a.

Vented with Schedule 40 PVC or ABS pipe

b.

Vented directly into a tile-lined masonry chimney

c.

Vented directly into any size tile-lined masonry chimney provided the chimney also serves a gas water heater

d.

vented into a tile-lined masonry chimney provided the chimney is first lined with an approved Type B -vent

Feedback
Your answer is correct.

The correct answer is: vented into a tile-lined masonry chimney provided the chimney is first lined with an approved Type B -vent

Question **137**
Incorrect

Mark 0.00 out of 1.00

Flag question

Question text

If a single fan-assisted appliance is vented into a masonary chimney lined with an approved Type B -vent and has three elbows in the vent connector , the capacity of the chimney liner shall be reduced by

Select one:

a.

30 %

b.

15 %

c.

20 %

d.

10 %

Feedback

Your answer is incorrect.

C.2.4

The correct answer is: 15 %

Question **138**

Correct

Mark 1.00 out of 1.00

Flag question

Question text

Which of the following limitations applies to B-vents ?

Select one:

a.

It can only be used on condensing appliances

b.

It may only be used in the same room as the appliance

c.

It may not be used where vent temperatures exceed 470 °F (244°C)

d.

It may only be used on recessed wall heaters

Feedback

Your answer is correct.

The correct answer is: It may not be used where vent temperatures exceed 470 °F (244°C)

Question **139**

Incorrect

Mark 0.00 out of 1.00

Flag question

Question text

What is the minimum gauge thickness of a 5 inch diameter single-wall vent connector serving a draft hood equipped appliance ?

Select one:

a.

22

b.

24

c.

28

d.

26

Feedback

Your answer is incorrect.

8.18.3 (A)

The correct answer is: 28

Question **140**

Correct

Mark 1.00 out of 1.00

Flag question

Question text

A single wall vent connector may pass through a floor or ceiling provided that

Select one:

a.

A non-combustible insulation is used to prevent combustible surfaces from exceeding 194 °F (90 °C)

b.

A single-wall vent connector is not permitted to pass through a floor or ceiling

c.

It has a thimble four inches larger in diameter than the vent connector

d.

It has a thimble six inches longer in diameter than the vent connector

Feedback

Your answer is correct.

8.18.23

The correct answer is: A single-wall vent connector is not permitted to pass through a floor or ceiling

Question **141**

Correct

Mark 1.00 out of 1.00

Flag question

Question text

One purpose of a draft hood is to:

Select one:

a.

keep the flue cold

b.

Neutralize excess air

c.

Prevent back drafts in the common vent

d.

Allow for spillage

Feedback

Your answer is correct.

The correct answer is: Allow for spillage

Question **142**

Incorrect

Mark 0.00 out of 1.00

Flag question

Question text

Condensation in a venting system could be caused by

Select one:

a.

Under-firing of the appliance and/or the chimney is too small

b.

Over-firing of the appliance and/or the chimney is too large<

c.

Under-firing of the appliance and/or the chimney is too large

d.

Over-firing of the appliance and/or the chimney is too small

Feedback

Your answer is incorrect.

The correct answer is: Under-firing of the appliance and/or the chimney is too large

Question **143**

Correct

Mark 1.00 out of 1.00

Flag question

Question text

The maximum temperature for Type B-vent is approximately

Select one:

a.

2100 °F

b.

140 °F

c.

212 °F

d.

470 °F

Feedback

Your answer is correct.

The correct answer is: 470 °F

Question **144**

Correct

Mark 1.00 out of 1.00

Flag question

Question text

A recessed wall furnace is the only appliance that may use Type _____ vent.

Select one:

a.

B

b.

C

c.

A

d.

BW

Feedback

Your answer is correct.

The correct answer is: BW

Question **145**

Correct

Mark 1.00 out of 1.00

Flag question

Question text

The minimum distance above a roof for any type or size of vent (other than special venting) is

Select one:

a.

900 mm

b.

300 mm

c.

200 mm

d.

600 mm

Feedback

Your answer is correct.

8.14.2

The correct answer is: 600 mm

Question **146**
Incorrect

Mark 0.00 out of 1.00

Flag question

Question text

The minimum size of a ventilated metal thimble used on an incinerator with a vent connector other then B vent having a diameter of 8 inches shall be

Select one:

a.

30 inches

b.

20 inches

c.

24 inches

d.

12 inches

Feedback

Your answer is incorrect.

8.18.12

The correct answer is: 20 inches

Question **147**
Correct

Mark 1.00 out of 1.00

Flag question

Question text

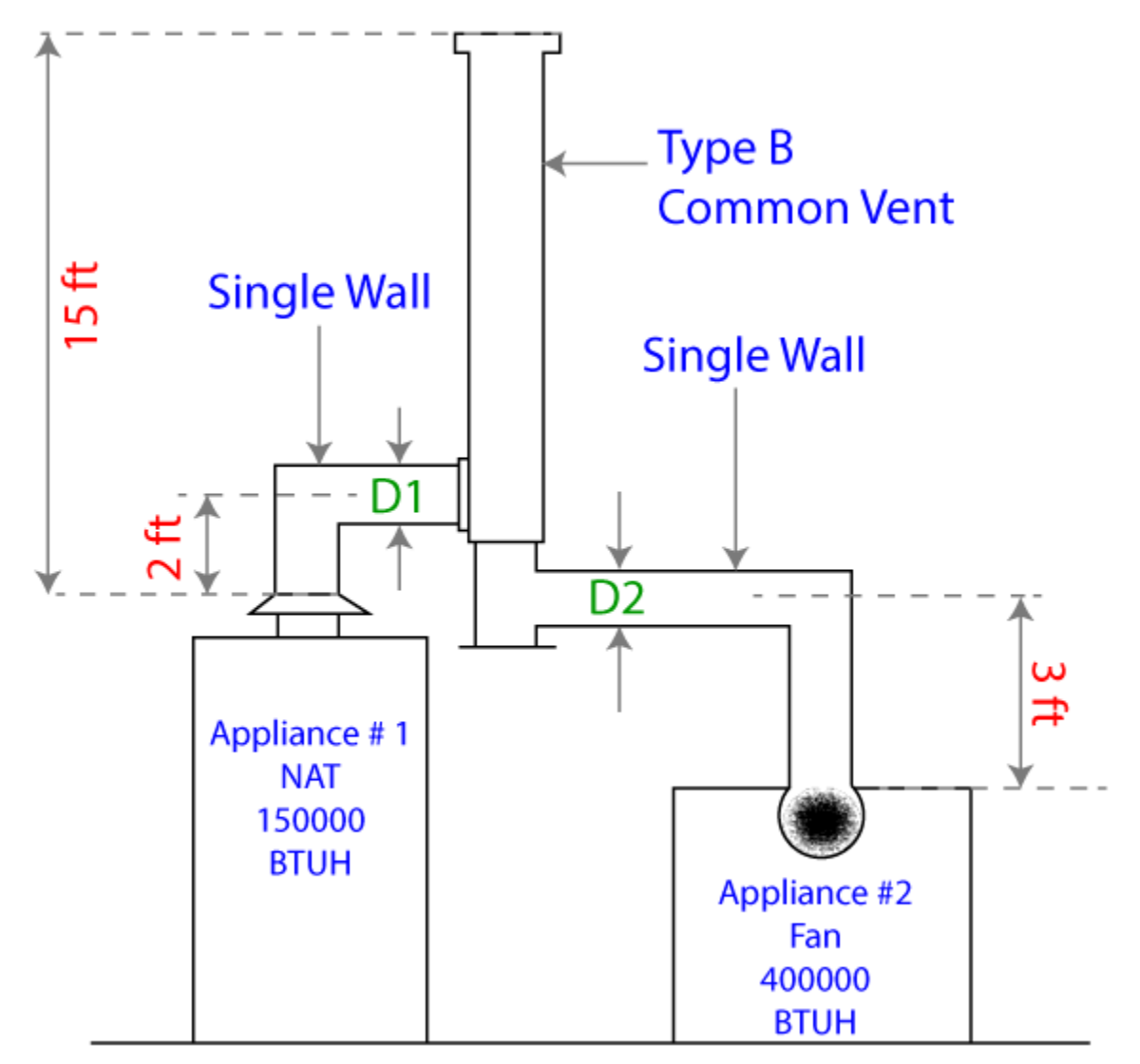

From the above drawing that doesn't comply with 8.2.1 a or b what should be the diameter of (D1) for appliance #1 using single wall connector?

Select one:

a.

8 inches (20.32 cm)

b.

6 inches (15.24 cm)

c.

5 inches (12.7 cm)

d.

7 inches (17.78 cm)

Feedback

Your answer is correct.

The correct answer is: 7 inches (17.78 cm)

Question **148**

Correct

Mark 1.00 out of 1.00

Flag question

Question text

In the drawing below that complies with 8.2.1 a or b, what is the diameter of the common vent ?

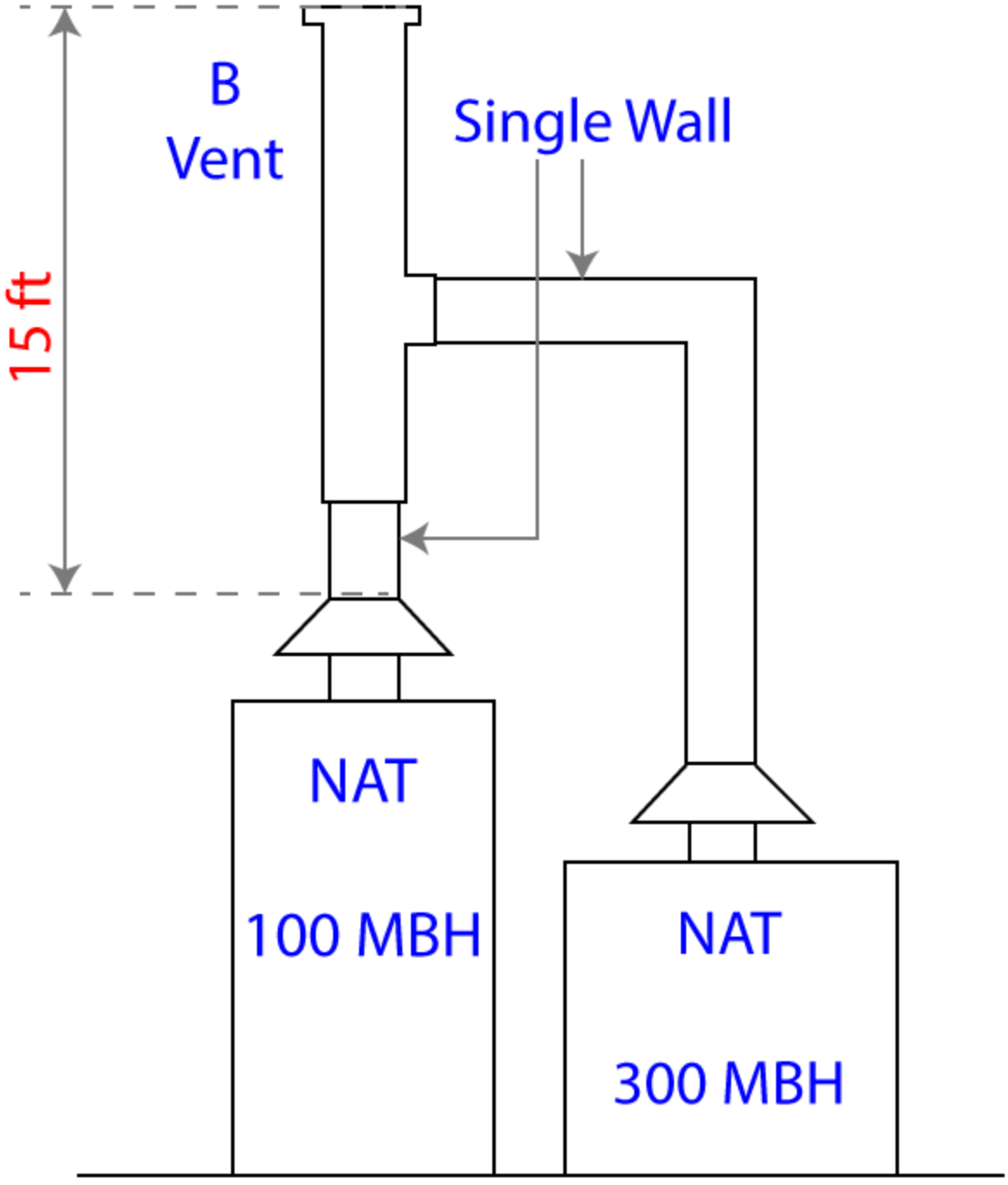

Select one:

a.

6 inches (15.24 cm)

b.

10 inches (223.86 cm)

c.

8 inches (20.32 cm)

d.

9 inches (25.40 cm)

Feedback

Your answer is correct.

The correct answer is: 10 inches (223.86 cm)

Question **149**

Incorrect

Mark 0.00 out of 1.00

Flag question

Question text

Referring to the drawing below that doesn't comply with 8.2.1 a or b, the furnace single wall vent connector must be a minimum diameter of

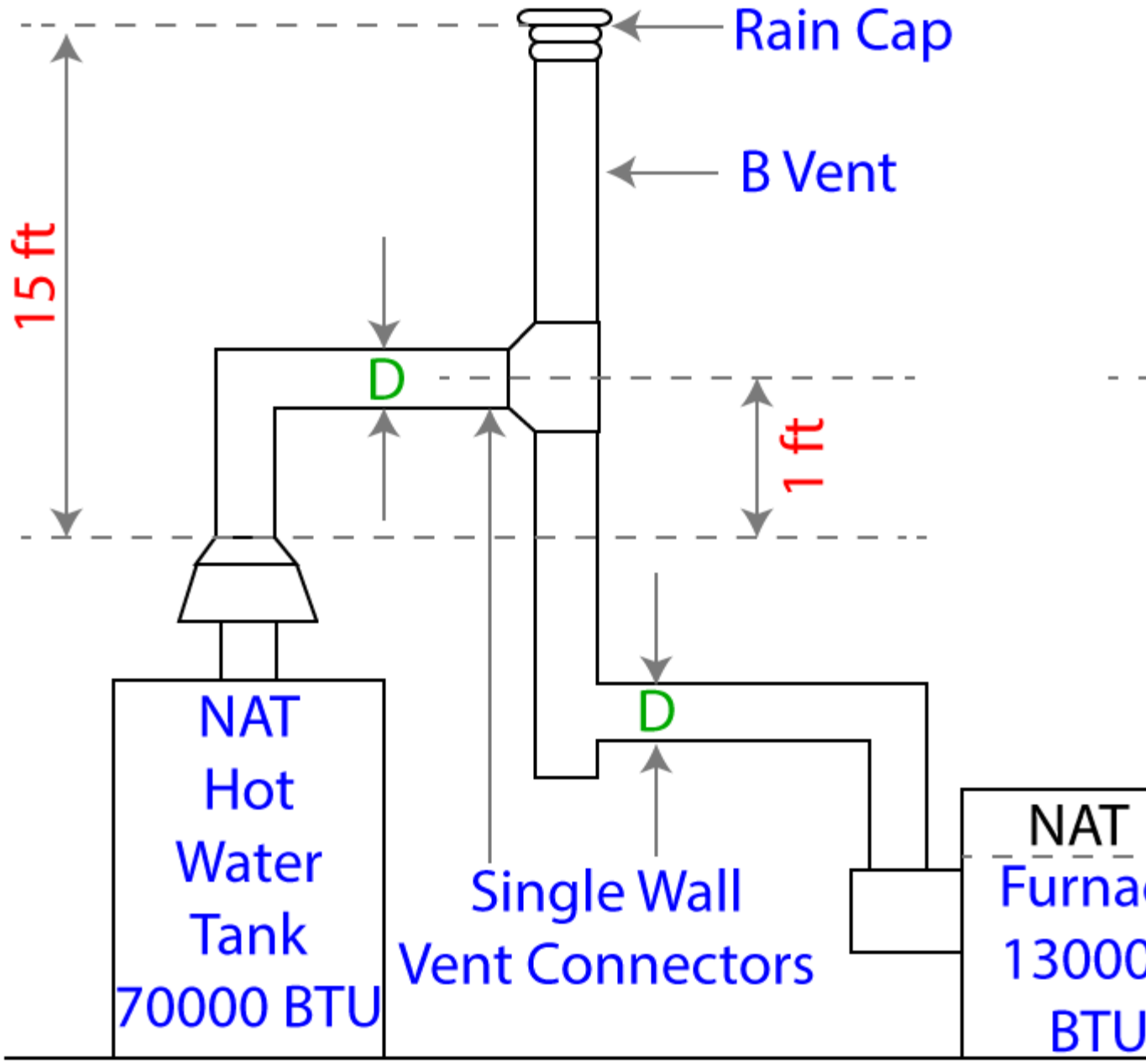

Select one:

a.

6 inches (15.24 cm)

b.

5 inches (12.70 cm)

c.

4 inches (10.16 cm)

d.

7 inches (17.78 cm)

Feedback

Your answer is incorrect.

The correct answer is: 6 inches (15.24 cm)

Question **150**

Correct

Mark 1.00 out of 1.00

Flag question

Question text

Referring to the drawing below, that doesn't comply with 8.2.1 a or b, what is the minimum diameter of D?

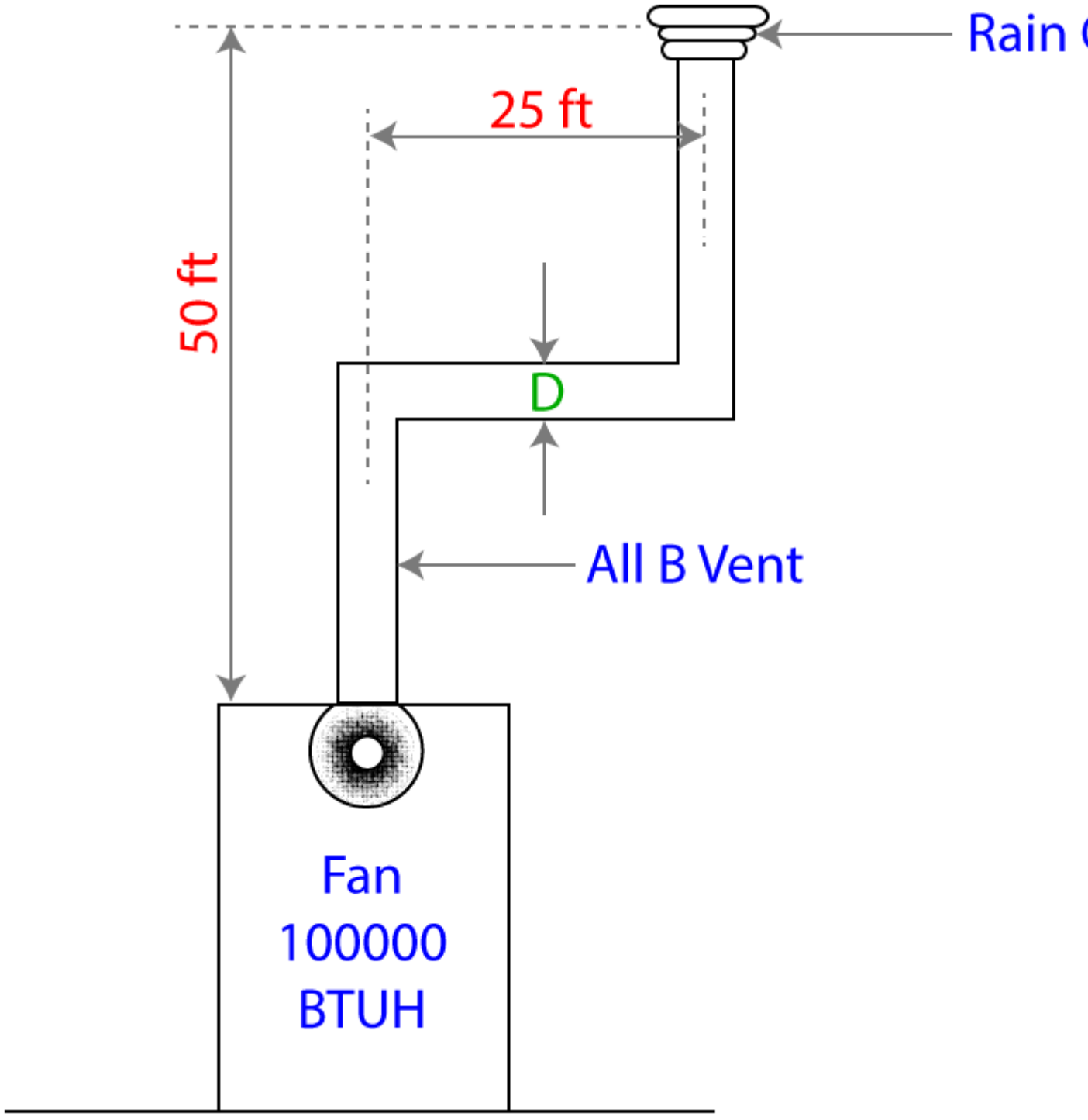

Select one:

a.

6 inches (15.24 cm)

b.

7 inches (17.78 cm)

c.

5 inches (12.70 cm)

d.

4 inches (10.16 cm)

Feedback

Your answer is correct.

The correct answer is: 4 inches (10.16 cm)

Question **151**

Incorrect

Mark 0.00 out of 1.00

Remove flag

Question text

In the drawing below, that complies with 8.2.1 a or b calculate the diameter of B

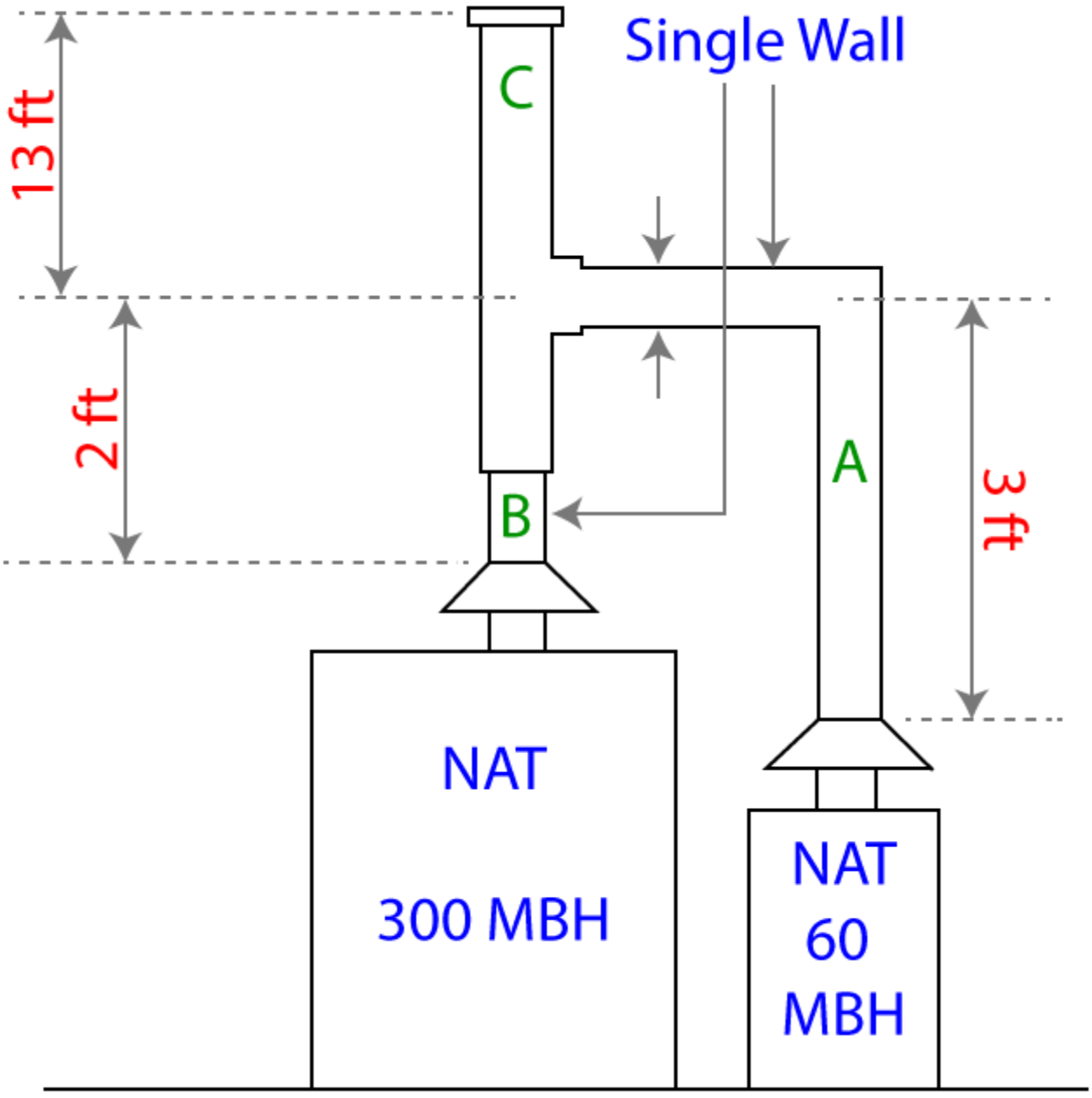

Select one:

a.

9 inch (22.86 cm)

b.

8 inch (20b32 cm)

c.

10 inch (25.40)

d.

12 inch (30.48 cm)

Feedback

Your answer is incorrect.

The correct answer is: 10 inch (25.40)

Question **152**

Incorrect

Mark 0.00 out of 1.00

Flag question

Question text

Referring to the drawing below that complies with 8.2.1, a or b, the minimum diameter of the single wall vent connector on the hot water heater is how many inches ?

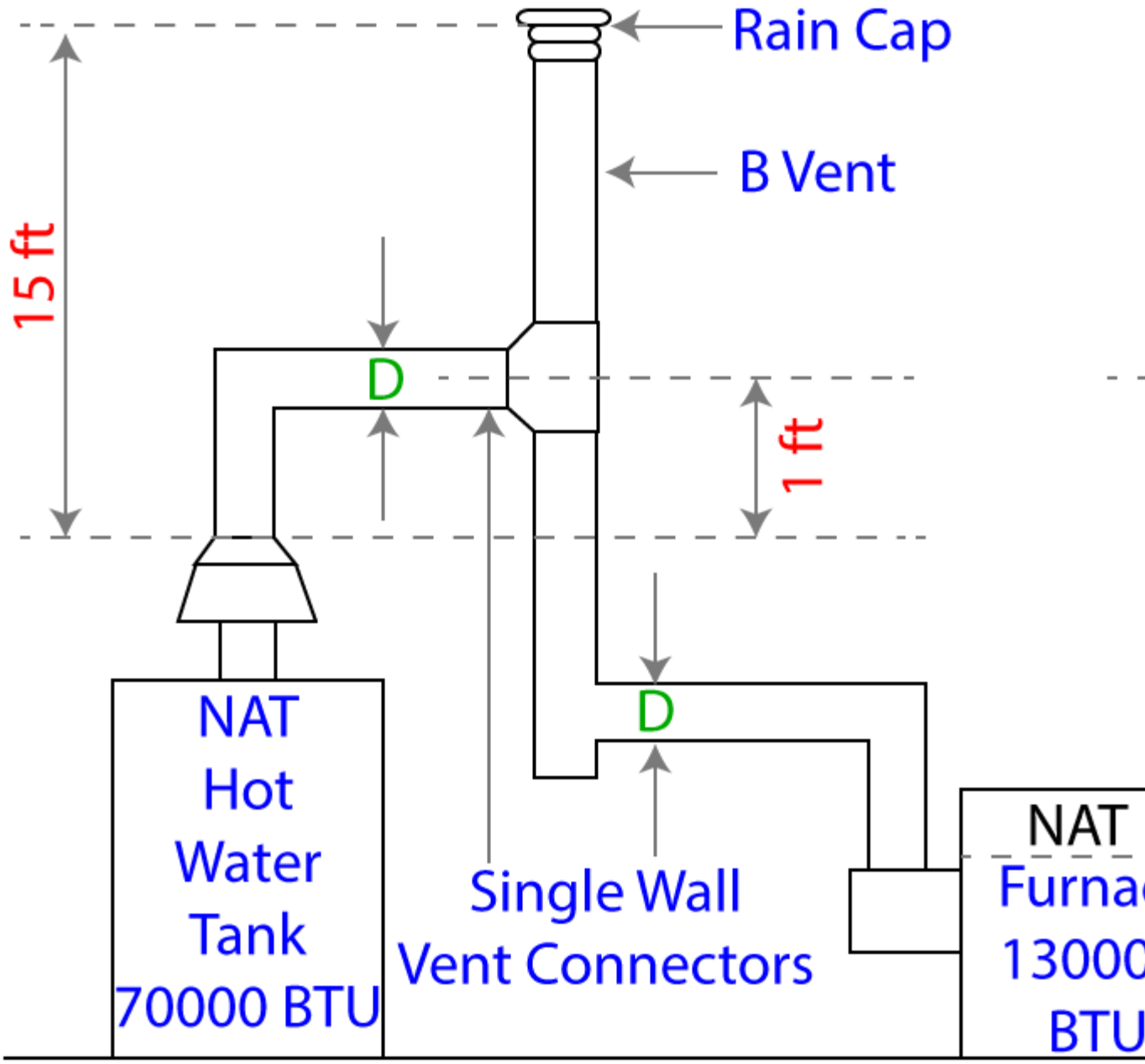

Select one:

a.

5 inches (15.24 cm)

b.

7 inches (17.78 cm)

c.

8 inches (20.32 cm)

d.

6 inches (12.70 cm)

Feedback

Your answer is incorrect.

The correct answer is: 6 inches (12.70 cm)

Question **153**

Not answered

Marked out of 1.00

Flag question

Question text

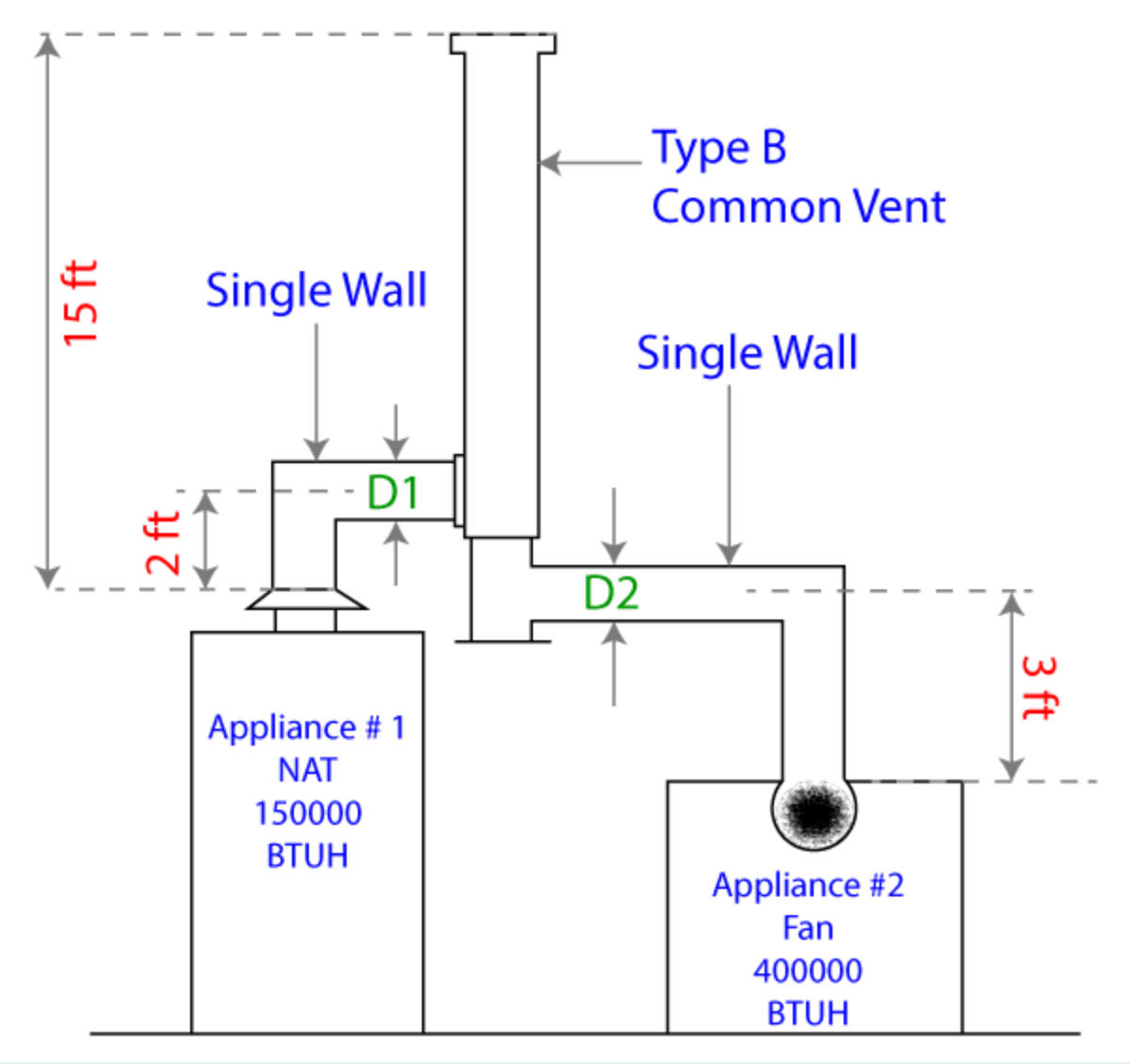

In the above drawing (that doesn't comply with 8.2.1 a or b) what should the diameter of D1 for appliance #1 using a single wall vent connector be ?

Select one:

a.

6 inches (15.24 cm)

b.

5 inches (12.7 cm)

c.

7 inches (17.78 cm)

d.

8 inches (20.32 cm)

Feedback

Your answer is incorrect.

The correct answer is: 7 inches (17.78 cm)

Question **154**

Not answered

Marked out of 1.00

Flag question

Question text

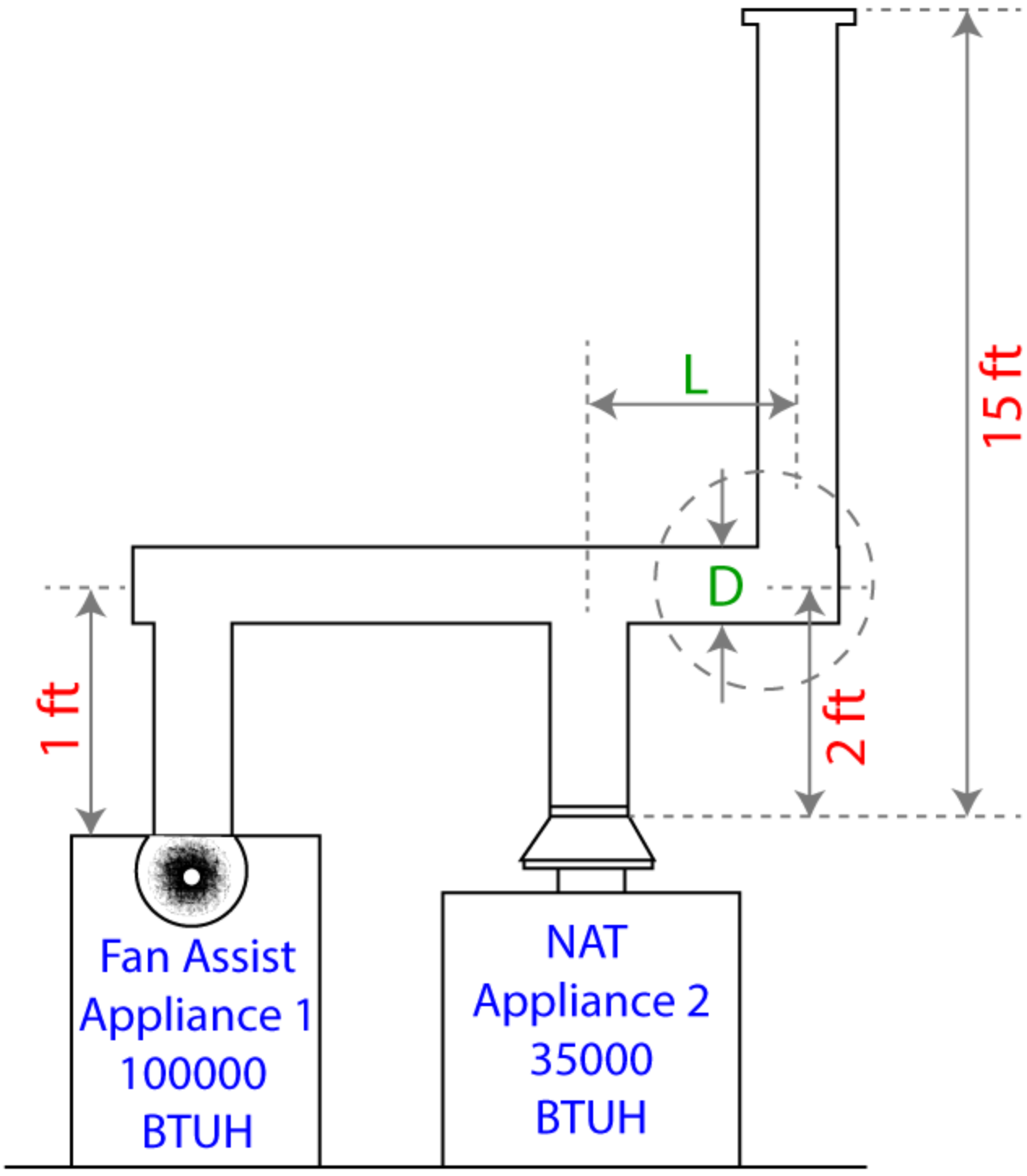

From the above drawing that complies with 8.2.1 a or b, using double wall vent connectors, what is the maximum allowable distance for L ?

Select one:

a.

108 inches (228.6 cm)

b.

6 feet (1.83 cm)

c.

9 inches (2.05 m)

d.

6 inches (15.24 cm)

Feedback

Your answer is incorrect.

The riser on the left is only 1' as compared to the riser on the right being 2'. Therefore the least vent height used to determine your vent size is 14' not 15' which results in using the 10' row.

The correct answer is: 108 inches (228.6 cm)

Question **155**

Not answered

Marked out of 1.00

Flag question

Question text

Referring to the drawing below (that doesn't comply with 8.2.1 a or b), the minimum diameter of the single wall vent connector on the hot water tank is how many inches ?

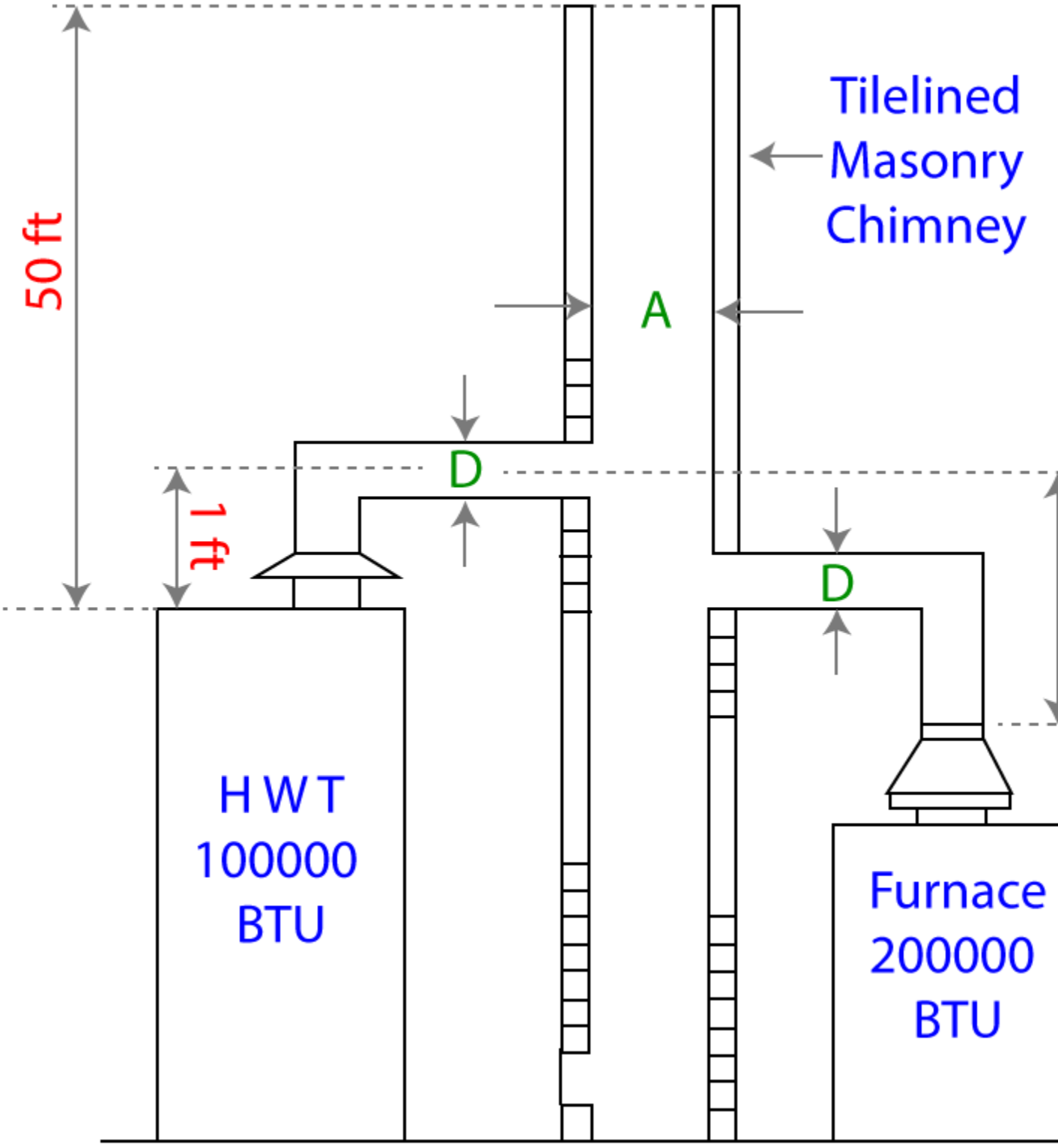
50 ft
1 ft
Tilelined
Masonry
Chimney
A
D
D
H W T
100000
BTU
Furnace
200000
BTU

Select one:

a.

7 inches (17.78 cm)

b.

6 inches (15.24 cm)

c.

4 inches (10.16 cm)

d.

5 inches (12.70 cm)

Feedback

Your answer is incorrect.

The correct answer is: 6 inches (15.24 cm)

Question **156**

Incorrect

Mark 0.00 out of 1.00

Flag question

Question text

Orifice Flow Chart (Capacity in cu									
Drill Size	Dia. In	Dia. Mm	CFH	KW/H	CFH	KW/H	CFH	KW/H	CF
			inch w.c.	kPa	inch w.c.	kPa	inch w.c.	kPa	inch
Pressure		=	3	0.747	3.5	0.872	4	0.996	5
11	0.191	4.851	95.63	28.02	103.29	30.26	110.43	32.35	12
10	0.193	4.914	97.64	28.61	105.47	30.9	112.75	33.03	12
9	0.196	4.978	100.7	29.5	108.77	31.86	116.28	34.07	13
8	0.199	5.054	103.81	30.41	112.13	32.85	119.87	35.12	13
12	0.189	4.8	93.64	27.43	101.14	29.63	108.13	31.68	12

An appliance, rated for 600,000 Btu/h (175.7 kW), is equipped with 5 burners and is firing on natural gas. C.V. = 1,050 Btu/ft.J (1 0.86 kW/m3) at 4 inches w.c. (996 Pa). In order to maintain its rated input, each orifice is what size ?

Select one:

a.

10

b.

11

c.

9

d.

8

Feedback

Your answer is incorrect.

The correct answer is: 10

Question **157**

Correct

Mark 1.00 out of 1.00

Flag question

Question text

To adjust the primary air on a barber tip burner (as used in commercial cooking equipment), you would

Select one:

a.

Turn the modified wing on the shutter

b.

Install a larger orifice

c.

Turn the spoiler screw in or out

d.

Primary air opening is fixed, no adjustment possible

Feedback

Your answer is correct.

The correct answer is: Primary air opening is fixed, no adjustment possible

Question **158**

Incorrect

Mark 0.00 out of 1.00

Flag question

Question text

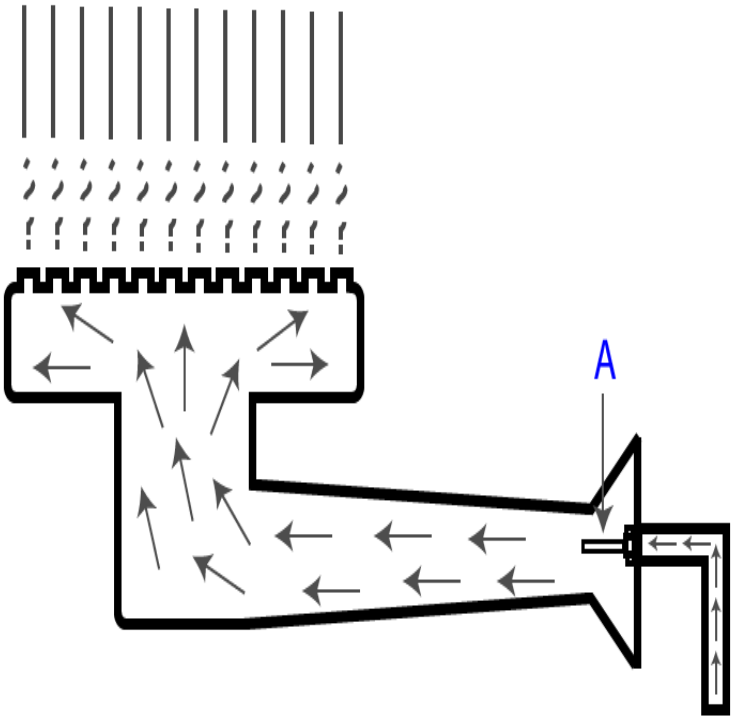

Referring to the above illustration, what would most likely happens if dirt caused a partial blockage in gas flow at A?

Select one:

a.

Flashback

b.

Hard blue flames

c.

Flame lift-off

d.

Luminous flames

Feedback

Your answer is incorrect.

The correct answer is: Flashback

Question **159**

Correct

Mark 1.00 out of 1.00

Flag question

Question text

Orifice Flow Chart (Capacity in cubic F									
Drill Size	Dia. In	Dia. Mm	CFH	KW/H	CFH	KW/H	CFH	KW/H	CFH
			inch w.c.	kPa	inch w.c.	kPa	inch w.c.	kPa	inch w.c.
Pressure		=	3	0.747	3.5	0.872	4	0.996	5
54	0.055	1.4	7.93	2.32	8.57	2.51	9.16	2.68	10.24
53	0.0595	1.51	9.28	2.72	10.02	2.94	10.72	3.14	11.98
1/16 inch	0.0625	1.587	10.24	3	11.06	3.24	11.82	3.46	13.22
52	0.0635	1.61	10.57	3.1	11.42	3.34	12.21	3.58	13.65

A 100,000 Btu/h (29.29 kW) appliance with four burners is operating on propane with a manifold pressure of 11 inches w.c. (2.74 kpa). Each orifice is what size ?

Select one:

a.

50

b.

27

c.

43

d.

54

Feedback

Your answer is correct.

The correct answer is: 54

Question **160**

Correct

Mark 1.00 out of 1.00

Flag question

Question text

An induced draft appliance requires the use of

Select one:

a.

an atmospheric burner specifically designed to reduce any effects of draft on the combustion process

b.

a blower placed upstream of the burner to overcome any resistance created throughout the combustion chamber

c.

A power burner capable of producing a ·slight pressure able to overcome the burner resistance

d.

A blower on the flue outlet to draw combustion product from the system

Feedback

Your answer is correct.

The correct answer is: A blower on the flue outlet to draw combustion product from the system

Question **161**

Correct

Mark 1.00 out of 1.00

Flag question

Question text

Orifice Flow Chart (Capacity in cu									
Drill Size	Dia. In	Dia. Mm	CFH	KW/H	CFH	KW/H	CFH	KW/H	CF
			inch w.c.	kPa	inch w.c.	kPa	inch w.c.	kPa	inch
Pressure		=	3	0.747	3.5	0.872	4	0.996	5
15	0.18	4.572	84.93	24.88	91.74	26.87	98.07	28.73	10
14	0.182	4.622	86.83	25.44	93.79	27.48	100.26	29.37	1
13	0.185	4.699	89.72	26.28	96.91	28.39	103.6	30.35	11
3/16"	0.1875	4.762	92.16	27	99.54	29.16	106.42	31.17	11
12	0.189	4.8	93.64	27.43	101.14	29.63	108.13	31.68	12

An appliance equipped with three burners **,** burning natural gas **;** C .V. = 1,000 Btu/Ft^3 (10**.**35 kW/rm^3) and operating at a manifold pressure of 3**.**5 inches w.c. (872 Pa), has a rated input of 300,000 Btu/h (87**.**87 kW). Each orifice is what size ? **(choose the best option)**

Select one:

a.

12

b.

13

c.

3/16

d.

14

Feedback

Your answer is correct.

The correct answer is: 3/16

Question **162**

Correct

Mark 1.00 out of 1.00

Flag question

Question text

An appliance has an input of 250,000 Btu/h (73.2 kW), with an 80% efficiency. The correct output is closest to

Select one:

a.

322222 Btu (94.38 kW)

b.

32222 Btu (9.44 kW)

c.

200000 Btu (58.56 kW)

d.

20000 Btu (5.86 kW)

Feedback

Your answer is correct.

The correct answer is: 200000 Btu (58.56 kW)

Question **163**
Incorrect

Mark 0.00 out of 1.00

Flag question

Question text

A pilot that burns at low turndown throughout the entire time the burner is in service, whether or not the main burner is firing, except that upon a call for heat the fuel flow to the pilot is automatically increased to produce a flame which will reliably ignite the main burner fuel, is a good definition of a

Select one:

a.

Interrupted pilot

b.

Continuous pilot

c.

Intermittent pilot

d.

Expanding pilot

Feedback

Your answer is incorrect.

The correct answer is: Expanding pilot

Question **164**

Correct

Mark 1.00 out of 1.00

Flag question

Question text

A noisy , lifting , blowing pilot flame is usually caused by

Select one:

a.

Too large of a pilot orifice

b.

High gas pressure

c.

A partially blocked pilot orifice

d.

A lack of secondary air

Feedback

Your answer is correct.

The correct answer is: High gas pressure

Question **165**

Incorrect

Mark 0.00 out of 1.00

Flag question

Question text

A forced warm air furnace equipped with an atmospheric burner, is found to have an above normal quantity of carbon monoxide in the flue products. Clocking the furnace indicates the input is incorrect. This first step to correct this problem would be to

Select one:

a.

Increase the air supply to the furnace room

b.

Increase the air supply to the burner

c.

Correct the input to the burner

d.

Adjust the primary air shutters

Feedback

Your answer is incorrect.

The correct answer is: Correct the input to the burner

Question **166**

Correct

Mark 1.00 out of 1.00

Flag question

Question text

In the diagram illustrated below, the orifice is adjusted for:

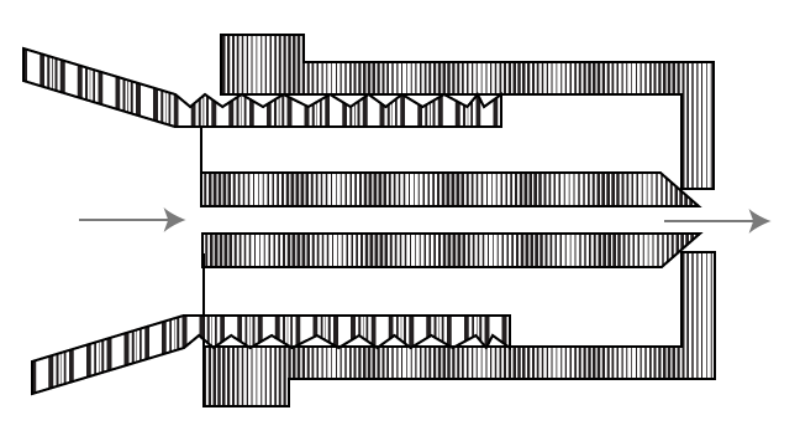

Select one:

a.

butane operation

b.

natural gas operation

c.

Not Adjustable

d.

propane operation

Feedback

Your answer is correct.

The correct answer is: propane operation

Question **167**

Incorrect

Mark 0.00 out of 1.00

Flag question

Question text

If the cross-sectional area of an orifice is doubled, the flow rate will be increased by

Select one:

a.

Half the original flow rate

b.

Eight times the original flow rate

c.

Four times the original flow rate

d.

Twice the original flow rate

Feedback

Your answer is incorrect.

The correct answer is: Twice the original flow rate

Question **168**

Correct

Mark 1.00 out of 1.00

Flag question

Question text

Orifice Flow Chart (Capacity in cubi									
Drill Size	Dia. In	Dia. Mm	CFH	KW/H	CFH	KW/H	CFH	KW/H	CFH
			inch w.c.	kPa	inch w.c.	kPa	inch w.c.	kPa	inch w.
Pressure		=	3	0.747	3.5	0.872	4	0.996	5
51	0.067	1.7	11.77	3.45	12.71	3.72	13.59	3.98	15.19
50	0.07	1.78	12.84	3.76	13.87	4.06	14.83	4.35	16.58
49	0.073	1.85	13.97	4.09	15.09	4.42	16.13	4.73	18.03
48	0.076	1.93	15.14	4.44	16.35	4.79	17.48	5.12	19.55
5/64 inch	0.0781	1.983	15.99	4.68	17.27	5.06	18.46	5.41	20.64

A natural gas boiler is equipped with 20 burners and fires at a manifold pressure of 3.5 inch water column. It is determined with the use of orifice drills that each orifice is a No 50. The calorific value of gas burned is 1070 Btu/Ft^3. The firing rate of the boiler will be closest to:

Select one:

a.

278000 Btu

b.

257000 Btu

c.

15000 Btu

d.

298000 Btu

Feedback

Your answer is correct.

The correct answer is: 298000 Btu

Question **169**

Correct

Mark 1.00 out of 1.00

Flag question

Question text

Orifice Flow Chart (Capacity in cub

Drill Size	Dia. In	Dia. Mm	CFH	KW/H	CFH	KW/H	CFH	KW/H	CFH
			inch w.c.	kPa	inch w.c.	kPa	inch w.c.	kPa	inch v
Pressure		=	3	0.747	3.5	0.872	4	0.996	5
45	0.082	2.08	17.63	5.16	19.04	5.58	20.35	5.96	22.7
44	0.086	2.18	19.39	5.68	20.94	6.13	22.39	6.56	25.0
43	0.089	2.26	20.76	6.08	22.43	6.57	23.98	7.02	26.8
42	0.0935	2.37	22.92	6.71	24.75	7.25	26.46	7.75	29.5
3/32 inch	0.0937	2.382	23.02	6.74	24.86	7.28	26.58	7.79	29.7

A natural gas appliance has a rated input of 143 MBH. If the appliance has four burners and operates at a manifold pressure of 7 inches water column the correct installed orifice would be: **(choose best option)**

Select one:

a.

No 13

b.

No 41

c.

No 42

d.

No 3/32

Feedback

Your answer is correct.

The correct answer is: No 3/32

Question **170**

Incorrect

Mark 0.00 out of 1.00

Flag question

Question text

An appliance equipped with nine burners using natural gas with a manifold pressure of 3.5 inches water column, has a rated input of 200 MBH. Select the orifices required from the orifice sizing table in the B 149.1 gas code.

Select one:

a.

No 42

b.

No 43

c.

No 44

d.

3/32 of an inch

Feedback

Your answer is incorrect.

The correct answer is: No 43

Question **171**

Correct

Mark 1.00 out of 1.00

Flag question

Question text

When converting an appliance from propane to natural gas, a gas fitter would

Select one:

a.

Reduce manifold pressure and orifice size

b.

Reduce manifold pressure and increase orifice size

c.

Increase manifold pressure and orifice size

d.

Increase manifold pressure and reduce orifice size

Feedback

Your answer is correct.

The correct answer is: Reduce manifold pressure and increase orifice size

Question **172**

Incorrect

Mark 0.00 out of 1.00

Remove flag

Question text

A 375 MBH appliance which is operated on propane, has four burners fired at 11 inches manifold pressure. Select the orifices size required from the orifice sizing table in the B 149.1 gas code (I.3).

Select one:

a.

No 34

b.

No 36

c.

7/64 inch

d.

No 33

Feedback

Your answer is incorrect.

The correct answer is: No 33

Question **173**

Incorrect

Mark 0.00 out of 1.00

Flag question

Question text

Orifice Flow Chart (Capacity in cubic Fe										
Drill Size	Dia. In	Dia. Mm	CFH	KW/H	CFH	KW/H	CFH	KW/H	CFH	K
			inch w.c.	kPa	inch w.c.	kPa	inch w.c.	kPa	inch w.c.	
Pressure		=	3	0.747	3.5	0.872	4	0.996	5	
27	0.144	3.6576	54.86	15.92	58.71	17.2	62.77	18.39	70.18	
26	0.147	3.733	56.65	16.59	61.18	17.92	65.41	19.16	73.13	
25	0.1495	3.797	58.59	17.16	63.28	18.54	67.65	19.82	75.64	
24	0.152	3.86	60.56	17.74	65.42	19.16	69.93	20.49	78.19	

Which orifice would have the highest flow rate ?

Select one:

a.

No 25 @ 4 inch w.c

b.

No 24 @ 3 inch w.c

c.

No 24 @ 4 inch w.c

d.

No 25 @ 3 inch w.c

Feedback

Your answer is incorrect.

The correct answer is: No 24 @ 4 inch w.c

Question **174**

Incorrect

Mark 0.00 out of 1.00

Remove flag

Question text

Orifice Flow Chart (Capacity in cubic

Drill Size	Dia. In	Dia. Mm	CFH	KW/H	CFH	KW/H	CFH	KW/H	CFH
			inch w.c.	kPa	inch w.c.	kPa	inch w.c.	kPa	inch w.c
Pressure		=	3	0.747	3.5	0.872	4	0.996	5
34	0.111	2.82	32.3	9.46	34.89	10.22	37.29	10.93	41.7
33	0.113	2.87	33.47	9.81	36.15	10.59	38.65	11.32	43.21
32	0.116	2.95	35.27	10.33	38.1	11.16	40.73	11.93	45.54
31	0.12	3.05	37.75	11.06	40.77	11.94	43.59	12.77	48.73
1/8 inch	0.125	3.18	40.96	12	44.24	12.96	47.3	13.86	52.88

A propane air mixture has a specific gravity of 1.3 and a calorific value of 1250 Btu/ft^3. If an appliance has a rated input of 200 MBH and has five burners operating on 4 inches manifold pressure , what is the required orifice size ?

Select one:

a.

No 33

b.

No 1/8"

c.

No 34

d.

No 31

Feedback

Your answer is incorrect.

The correct answer is: No 31

Question **175**

Incorrect

Mark 0.00 out of 1.00

Flag question

Question text

Which of the following items determine the firing rate of an atmospheric burner ?

Select one:

a.

The orifice size and the primary air

b.

The orifice size and the pipe size

c.

The pressure and the correct amount of air

d.

The orifice size and the pressure

Feedback

Your answer is incorrect.

The correct answer is: The orifice size and the pressure

Question **176**

Correct

Mark 1.00 out of 1.00

Flag question

Question text

A boiler certified for high altitude is installed at an elevation of 5400 feet. The rating plate indicates a sea level rating of 150,000 Btuh and a high altitude rating of 130,000 Btuh. The boiler should be adjusted to an input of

Select one:

a.

130000 Btuh

b.

124800 Btuh

c.

109200 Btuh

d.

150000 Btuh

Feedback

Your answer is correct.

The correct answer is: 124800 Btuh

Question **177**

Correct

Mark 1.00 out of 1.00

Flag question

Question text

To double the gas flow through the orifice of an atmospheric burner , the manifold pressure shall be increased by

Select one:

a.

three times

b.

four times

c.

50 **%**

d.

double

Feedback

Your answer is correct.

The correct answer is: four times

Question **178**

Correct

Mark 1.00 out of 1.00

Flag question

Question text

A lifting flame can best be eliminated by

Select one:

a.

Increasing the amount of primary air

b.

Increasing the amount of secondary air

c.

Decreasing the amount of secondary air

d.

Decreasing the amount of primary air

Feedback

Your answer is correct.

The correct answer is: Decreasing the amount of primary air

Question **179**
Incorrect

Mark 0.00 out of 1.00

Flag question

Question text
If flashback is occurring in an atmospheric burner, the corrective action required would be to

Select one:

a.

Increase the primary air and decrease the gas pressure

b.

Clean the burner and increase the primary air

c.

Decrease the primary air and increase the gas pressure

d.

Clean the burner and decrease the gas pressure

Feedback
Your answer is incorrect.

The correct answer is: Decrease the primary air and increase the gas pressure

Question **180**
Incorrect

Mark 0.00 out of 1.00

Flag question

Question text

The test dials are timed on a gas meter that is recording a flow rate of gas at pressure more than 1/2 PSIG (3.45 kPa). If no allowance is made for the compression of the gas, the volume of flow indicated by the test dials will

Select one:

a.

Be the volume of fuel gas expressed in SCFH entering the combustion chamber

b.

Indicate the exact Btu input to the combustion chamber

c.

Indicated the unit is over-fired

d.

Indicate the unit is under-fired

Feedback

Your answer is incorrect.

The correct answer is: Indicate the unit is under-fired

Question **181**

Incorrect

Mark 0.00 out of 1.00

Flag question

Question text

A furnace fired on natural gas is clocked at 20 seconds for one revolution of a 0.05 cubic meter test dial. The pressure of the gas in the meter is 7 inches w.c. (1.74 kPa). Calorific value = 1000 Btu/ft^3 (10.35 kW/m^3). The correct input is closest to

Select one:

a.

320000 Btu/h (93.6 kW)

b.

90000 Btu/h (26.4 kW)

c.

93.15 Btu/h (0.027 kW)

d.

9000 Btu/h (2.63 kW)

Feedback

Your answer is incorrect.

The correct answer is: 320000 Btu/h (93.6 kW)

Question **182**

Correct

Mark 1.00 out of 1.00

Flag question

Question text

A 5 cubic foot test dial takes 30 seconds to make 1 complete revolution. The correct flow rate is closest to

Select one:

a.

30 cubic feet / hour (0.85 m^3)

b.

120 cubic feet / hour (3.36 m^3)

c.

750 cubic feet / hour (21.24 m^3)

d.

600 cubic feet / hour (16.80 m^3)

Feedback

Your answer is correct.

The correct answer is: 600 cubic feet / hour (16.80 m^3)

Question **183**

Incorrect

Mark 0.00 out of 1.00

Flag question

Question text

A low pressure meter set require 32 seconds for a 0.05 m^3 test dial to make one revolution. The calorific value of the gas is 1000 Btu/cu.ft. The closest correct input is :

Select one:

a.

56,250 Btu/h

b.

1,986,948 Btu/h

c.

582,000 Btu/h

d.

200,000 Btu/h

Feedback

Your answer is incorrect.

The correct answer is: 200,000 Btu/h

Question **184**

Correct

Mark 1.00 out of 1.00

Flag question

Question text

A propane meter revolves in 25 seconds for a 1 cubic foot dial, propane cv = 2500 Btu/ft^3 . The correct input is closest to :

Select one:

a.

325451 Btu/h (95.32 kW)

b.

151200 Btu/h (44.28 kW)

c.

403200 Btu/h (118.09 kW)

d.

360000 Btu/h (105.44 kW)

Feedback

Your answer is correct.

The correct answer is: 360000 Btu/h (105.44 kW)

Question **185**

Correct

Mark 1.00 out of 1.00

Flag question

Question text

A furnace rated at 250000 Btu/h (73.23 kW) is fired on natural gas c.v = 1000 Btu/cu.ft (10.35 kW/m^3). How long will it take the 5 cubic foot test dial to make one complete revolution ?

Select one:

a.

180 seconds

b.

18 seconds

c.

100 seconds

d.

72 seconds

Feedback

Your answer is correct.

The correct answer is: 72 seconds

Question **186**

Correct

Mark 1.00 out of 1.00

Flag question

Question text

The correction factor of 1.679 would be used for a system operating at

Select one:

a.

5 PSIG (34 kPa)

b.

10 PSIG (70 kPa)

c.

20 PSIG (140 kPa)

d.

2 PSIG (14 kPa)

Feedback

Your answer is correct.

The correct answer is: 10 PSIG (70 kPa)

Question **187**

Correct

Mark 1.00 out of 1.00

Flag question

Question text

Calculate the input for the following natural gas appliance

- Calorific value of gas = 1000 Btu/cu.ft (10.35 kW/m^3)
- Meter pressure = 7 inches w.c. (1.74 kPa)
- Manifold pressure = 5 inches w.c. (1.24 kPa)
- Local atmospheric pressure = 14.68 PSIA
- Test dial = 1 cu.ft

One revolution of the test dial takes 31.5 seconds. The clocked input is closest to which one of the following inputs ?

Select one:

a.

116129 Btu/h (34.01 kW)

b.

115428 Btu/h (33.81 kW)

c.

114285 Btu/h (33.47 kW)

d.

119999 Btu/h (35.15 kW)

Feedback

Your answer is correct.

The correct answer is: 114285 Btu/h (33.47 kW)

Question **188**

Incorrect

Mark 0.00 out of 1.00

Remove flag

Question text

Calculate the input to an appliance by using the following information

- Local atmospheric pressure = 14.60 PSIA
- Gas service line pressure = 60 PSIG
- Gas pressure through the meter = 10 PSIG
- House line pressure = 2 PSIG
- Appliance manifold pressure = 5 inches w.c
- Test dial = 0.05 m^3

Test dial complete one revolution in 1 minute. Calorific value of gas = 1000 Btu/cu.ft (10.35 kW/m^3). The correct input is closest to which one of the following units ?

Select one:

a.

536000 Btu/h (156.9 kW)

b.

106000 Btu/h (31 kW)

c.

300000 Btu/h (87.9 kW)

d.

177000 Btu/h (51.8 kW)

Feedback

Your answer is incorrect.

The correct answer is: 177000 Btu/h (51.8 kW)

Question **189**

Incorrect

Mark 0.00 out of 1.00

Remove flag

Question text

Calculate the input to the following boiler. The boiler is rated at 1,000,000 Btu/h (292.9 kW). It has four burners and operates at a manifold pressure of 7 inches w.c. (1.74 kPa) with a meter pressure of 5 psi. The 0.1 Cu m/rev test dial took 26 seconds to make one revolution. The fuel is a natural gas with a calorific value of 1050 Btu/c.f. (10.84kW/m^3). The building is at sea level (14.73 PSIA). Choose the nearest applicable input.

Select one:

a.

520000 Btu/h (152kW)

b.

490000 Btu/h (143kW)

c.

750000 Btu/h (220 kW)

d.

686000 Btu/h (201 kW)

Feedback

Your answer is incorrect.

The correct answer is: 686000 Btu/h (201 kW)

Question **190**

Correct

Mark 1.00 out of 1.00

Flag question

Question text

The purpose of clocking a meter by a gas fitter is

Select one:

a.

To see how long it takes the test dial to go around

b.

To check how much gas is consumed in a month for billing purposes

c.

To determine how much gas an appliance consumed per hour

d.

Solely used as a gas leak check

Feedback

Your answer is correct.

The correct answer is: To determine how much gas an appliance consumed per hour

Question **191**

Correct

Mark 1.00 out of 1.00

Flag question

Question text

Which type of meter corrects its consumption dials for selling pressure only ?

Select one:

a.

PFM

b.

BVI

c.

BPI

d.

BTM

Feedback

Your answer is correct.

The correct answer is: BPI

Question **192**

Correct

Mark 1.00 out of 1.00

Flag question

Question text

Determine the number of seconds for one revolution of a 2 cubic foot test dial if the input is 302400 Btuh the meter pressure is 7 inches water column and the gas used has a calorific value of 1050 Btu/ft^3

Select one:

a.

28.5 seconds

b.

4 seconds

c.

23.8 seconds

d.

25 seconds

Feedback

Your answer is correct.

The correct answer is: 25 seconds

Question **193**

Correct

Mark 1.00 out of 1.00

Flag question

Question text

A furnace fired on propane is clocked at 22 seconds on a 0.5 ft^3 test dial. The meter is on low pressure. Its input will be closest to

Select one:

a.

2045000 Btu/h

b.

82000 Btu/h

c.

818000 Btu/h

d.

204545 Btu/h

Feedback

Your answer is correct.

The correct answer is: 204545 Btu/h

Question **194**

Incorrect

Mark 0.00 out of 1.00

Remove flag

Question text

A burner fired on a 50 % butane-air mixture clocked at 48 seconds on a 2 ft^3 test dial. The meter is at 5 PSIG. Its input will be closest to

Select one:

a.

321000 Btu/h

b.

643000 Btu/h

c.

240000 Btu/h

d.

480000 Btu/h

Feedback

Your answer is incorrect.

The correct answer is: 321000 Btu/h

Question **195**

Correct

Mark 1.00 out of 1.00

Flag question

Question text

Determine the input under the following conditions (choose closest answer) :

- Service pressure = 60 PSIG
- Local atmospheric pressure = 13.38 PSIA
- Seconds / revolution = 18
- Meter pressure = 5 PSIG
- Manifold pressure = 7 inches water column
- Test dial = 0.05 m^3 / revolution
- Building line pressure = 2 PSIG
- Truck in driveway = Green
- Weather = Partly cloudy
- Gas = 1050 Btu/Ft^3

Select one:

a.

496000 Btuh

b.

420000 Btuh

c.

131000 Btuh

d.

463000 Btuh

Feedback

Your answer is correct.

The correct answer is: 463000 Btuh

Question **196**

Incorrect

Mark 0.00 out of 1.00

Flag question

Question text

Calculate the input (to closest answer) using the following information:

- Service pressure = 60 PSIG
- Meter pressure = 5 PSIG
- Manifold pressure = 3.5 inches water column
- Test dial size = 5 ft^3
- Second / revolution = 20
- C.V = 1000 Btu/ft^3

Select one:

a.

1205000 Btuh

b.

900000 Btuh

c.

4566000 Btuh

d.

6300000 Btuh

Feedback

Your answer is incorrect.

The correct answer is: 1205000 Btuh

Question **197**

Correct

Mark 1.00 out of 1.00

Flag question

Question text

A low-pressure meter set measuring natural gas requires 32 seconds for a 1/2 cubic meter test dial to make one revolution. The correct input is closest to

Select one:

a.

582 Btuh

b.

582 kW

c.

56250 kW

d.

56.25 Btuh

Feedback

Your answer is correct.

The correct answer is: 582 kW

Question **198**

Incorrect

Mark 0.00 out of 1.00

Flag question

Question text

After replacing a hot water tank rated at 36000 Btuh the gas fitter must clock it. However the furnace must stay on throughout the clocking procedure. Clocking only the furnace (rated at 120000 Btuh) , the test dial takes 150 seconds for one revolution (5 ft^3 T.D). With both units firing the time per revolution drops to 116 seconds. If the meter is low pressure meter , we can conclude that

Select one:

a.

The hot water tank is overfired

b.

Both units need converting

c.

The furnace is overfired

d.

The installation is acceptable

Feedback

Your answer is incorrect.

The correct answer is: The installation is acceptable

Question **199**

Correct

Mark 1.00 out of 1.00

Flag question

Question text

An appliance fired on low pressure natural gas takes 27 seconds for one revolution of a 0.05 m^3 test dial. Its input will be closest to

Select one:

a.

235000 Btuh

b.

6.67 kW

c.

13.24 kW

d.

167000 Btuh

Feedback

Your answer is correct.

The correct answer is: 235000 Btuh

Question **200**

Correct

Mark 1.00 out of 1.00

Flag question

Question text

An appliance is clocked on a 2 PSIG meter set without correcting for the pressure. The result will be

Select one:

a.

The appliance clocked input will be correct

b.

The appliance will appear to be overfired

c.

The appliance will appear to the underfired

d.

There is no need to clock any appliance is 2 PSIG gas is used

Feedback

Your answer is correct.

The correct answer is: The appliance will appear to the underfired

Question **201**

Correct

Mark 1.00 out of 1.00

Flag question

Question text

A 200000 Btu/h natural gas furnace is fired on natural gas with a calorific value of 1000 Btu/cu.ft. The supply pressure is 7 inches w.c. With the furnace operating , the meter is clocked and it takes 30 seconds for the 2 cu.ft test dial to make 1 complete revolution. Referring to the above information, which one of the following statement is correct ?

Select one:

a.

The furnace is under-fired and the orifice size will have to be increased

b.

The furnace is over-fired and the orifice size will have to be increased

c.

The furnace is firing at the correct input

d.

The furnace is over-fired and the orifice size will have to be decreased

Feedback

Your answer is correct.

The correct answer is: The furnace is over-fired and the orifice size will have to be decreased

Question **202**

Correct

Mark 1.00 out of 1.00

Flag question

Question text

A furnace is certified to operate on propane with an input of 375,000 Btu/hat 10 inches w.c. The gas has a calorific value of 2,500 Btu/cu.ft. With the furnace operating, the meter is clocked and it takes 30 seconds for the 1 cubic foot test dial to make one complete revolution. From this, you can conclude that the appliance is

Select one:

a.

Under-fired by 20 %

b.

Under-fired by 80 %

c.

Firing at the correct input

d.

Over-fired by 20 %

Feedback

Your answer is correct.

The correct answer is: Under-fired by 20 %

Question **203**

Correct

Mark 1.00 out of 1.00

Flag question

Question text

If the millivolt reading produced by a thermocouple is less than 7 millivolts and the magnet will not hold in

Select one:

a.

Reduce the input to the pilot

b.

Increase the high limit setting

c.

Change the thermocouple

d.

Change the magnet

Feedback

Your answer is correct.

The correct answer is: Change the thermocouple

Question **204**

Correct

Mark 1.00 out of 1.00

Flag question

Question text

Referring to the drawing below all readings and meter checks should be made with the

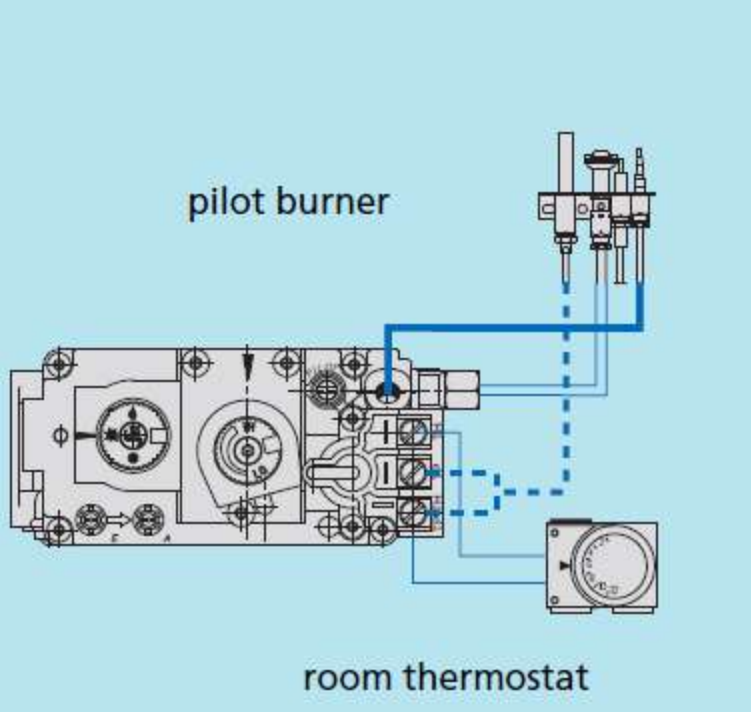

Select one:

a.

Thermostat ON and calling for heat

b.

High limit in the open position

c.

Thermostat OFF

d.

Pilot generator disconnected from the gas valve

Feedback

Your answer is correct.

The correct answer is: Thermostat ON and calling for heat

Question **205**

Correct

Mark 1.00 out of 1.00

Flag question

Question text

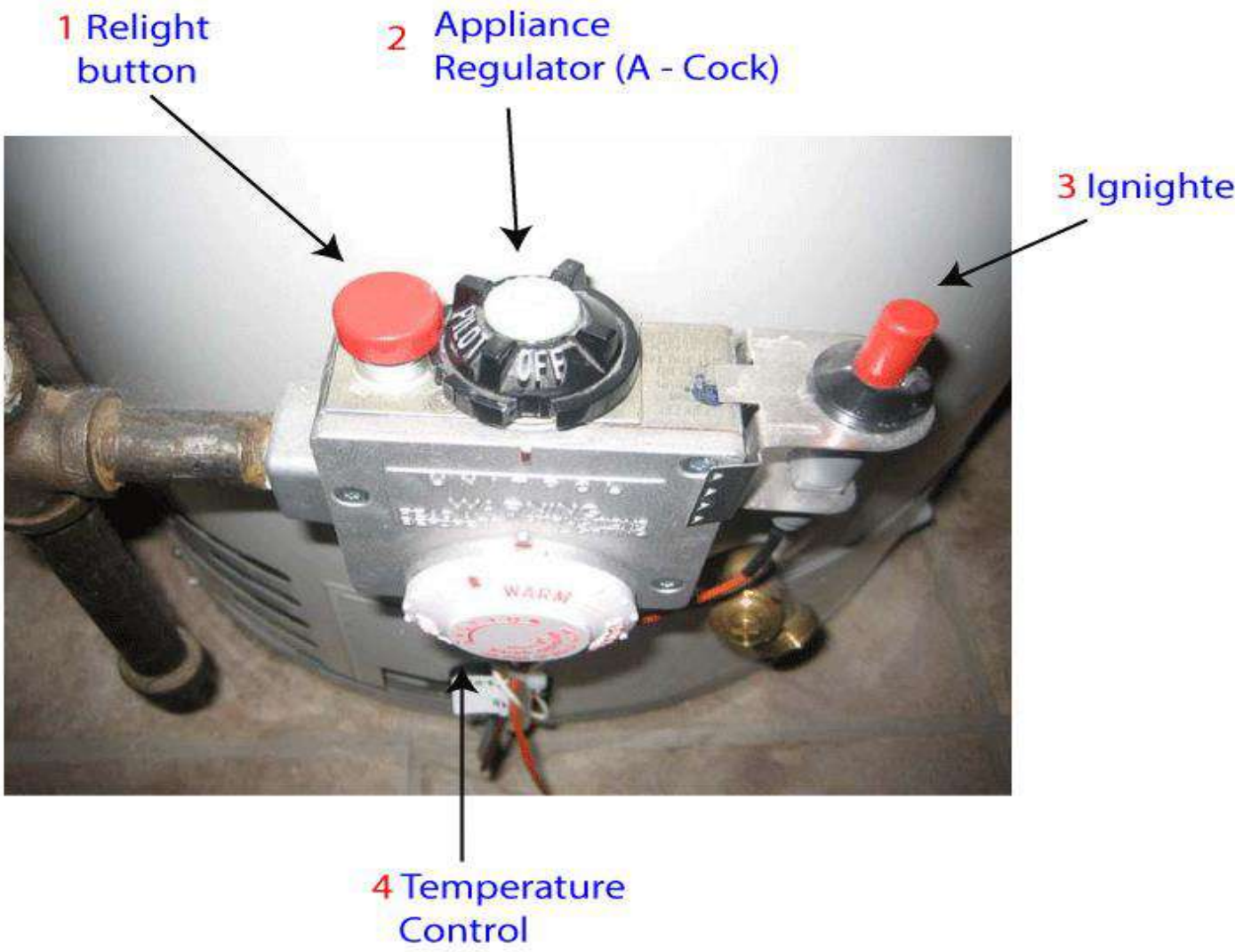

Identify the correct components in the above drawings

Select one:

a.

No 4 = temperature control knob

b.

No 1 = temperature sensor

c.

No 4 =thermostat

d.

No 1 = thermocouple connection

Feedback

Your answer is correct.

The correct answer is: No 4 = temperature control knob

Question **206**

Correct

Mark 1.00 out of 1.00

Flag question

Question text

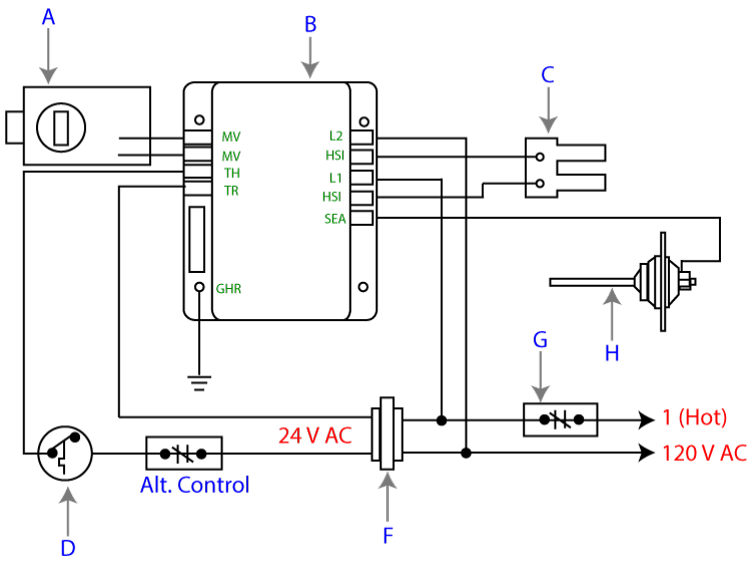

In the above drawing , what does item A indicate ?

Select one:

a.

Gas valve

b.

Power supply (120V AC)

c.

Ignition module

d.

Limit control

Feedback

Your answer is correct.

The correct answer is: Gas valve

Question **207**

Correct

Mark 1.00 out of 1.00

Flag question

Question text

On a call for heat, when the thermostat contacts close, the next sequence is the

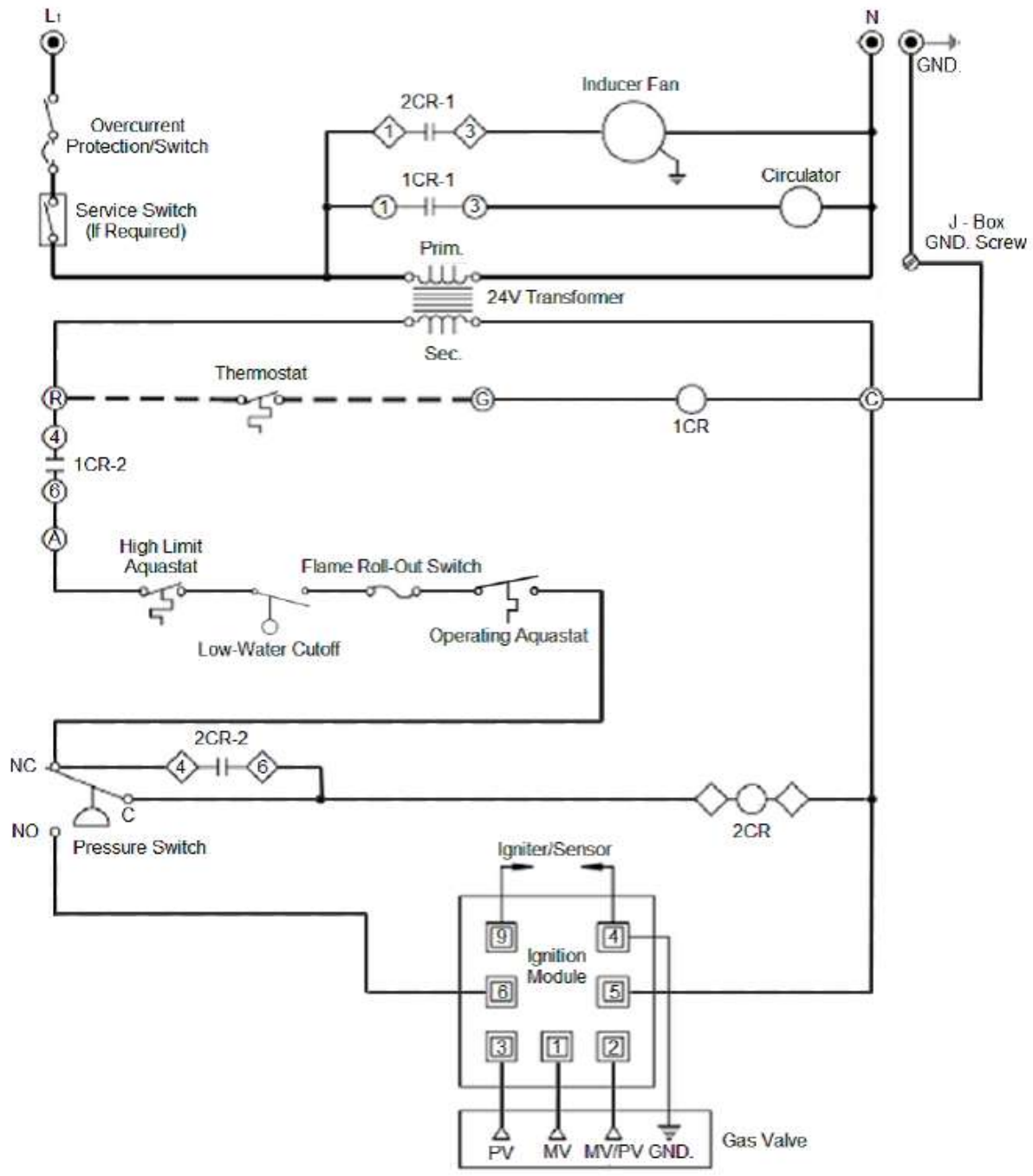

Select one:

a.

Air proving switch closes, powering the combustion air blower relay

b.

Spark ignition and pilot valves are energized

c.

Relay coil number 1 is energized , powering the circulator.

d.

Blower motor is energized as soon as the pilot has been proven

Feedback

Your answer is correct.

The correct answer is: Relay coil number 1 is energized , powering the circulator.

Question **208**

Incorrect

Mark 0.00 out of 1.00

Flag question

Question text

On a 24V control system the S S O valve electromagnet receives its power from the

Select one:

a.

Thermopile

b.

Transformer

c.

Photocell

d.

Thermocouple

Feedback

Your answer is incorrect.

The correct answer is: Thermocouple

Question **209**

Correct

Mark 1.00 out of 1.00

Flag question

Question text

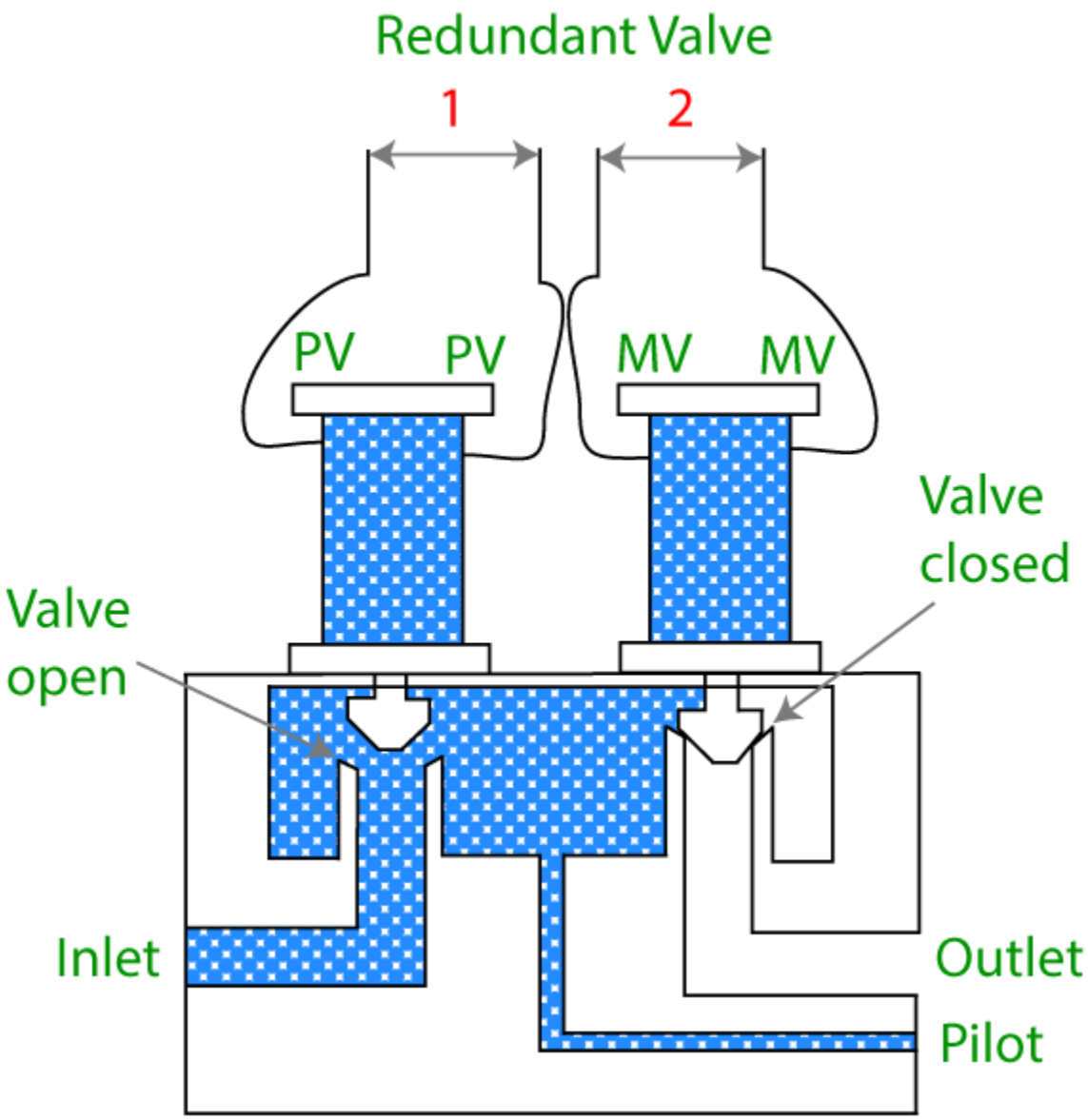

Referring to the above drawing , what voltages would you expect to read at points 1 (PV-PV) and 2 (MV-MV) (the maximum voltage available is 24 volts) ?

Select one:

a.

1 = 24 volts , 2 = 24 volts

b.

1 = 24 volts , 2 = 0 volts

c.

1 = 12 volts , 2 = 24 volts

d.

1 = 0 volts , 2 = 0 volts

Feedback

Your answer is correct.

The correct answer is: 1 = 24 volts , 2 = 0 volts

Question **210**

Correct

Mark 1.00 out of 1.00

Flag question

Question text

A single thermocouples primary purpose is to

Select one:

a.

Give 100 % safety

b.

Supply power to the thermostat

c.

Prove that the pilot is lit

d.

Supply milliwatts

Feedback

Your answer is correct.

The correct answer is: Prove that the pilot is lit

Question **211**

Correct

Mark 1.00 out of 1.00

Flag question

Question text

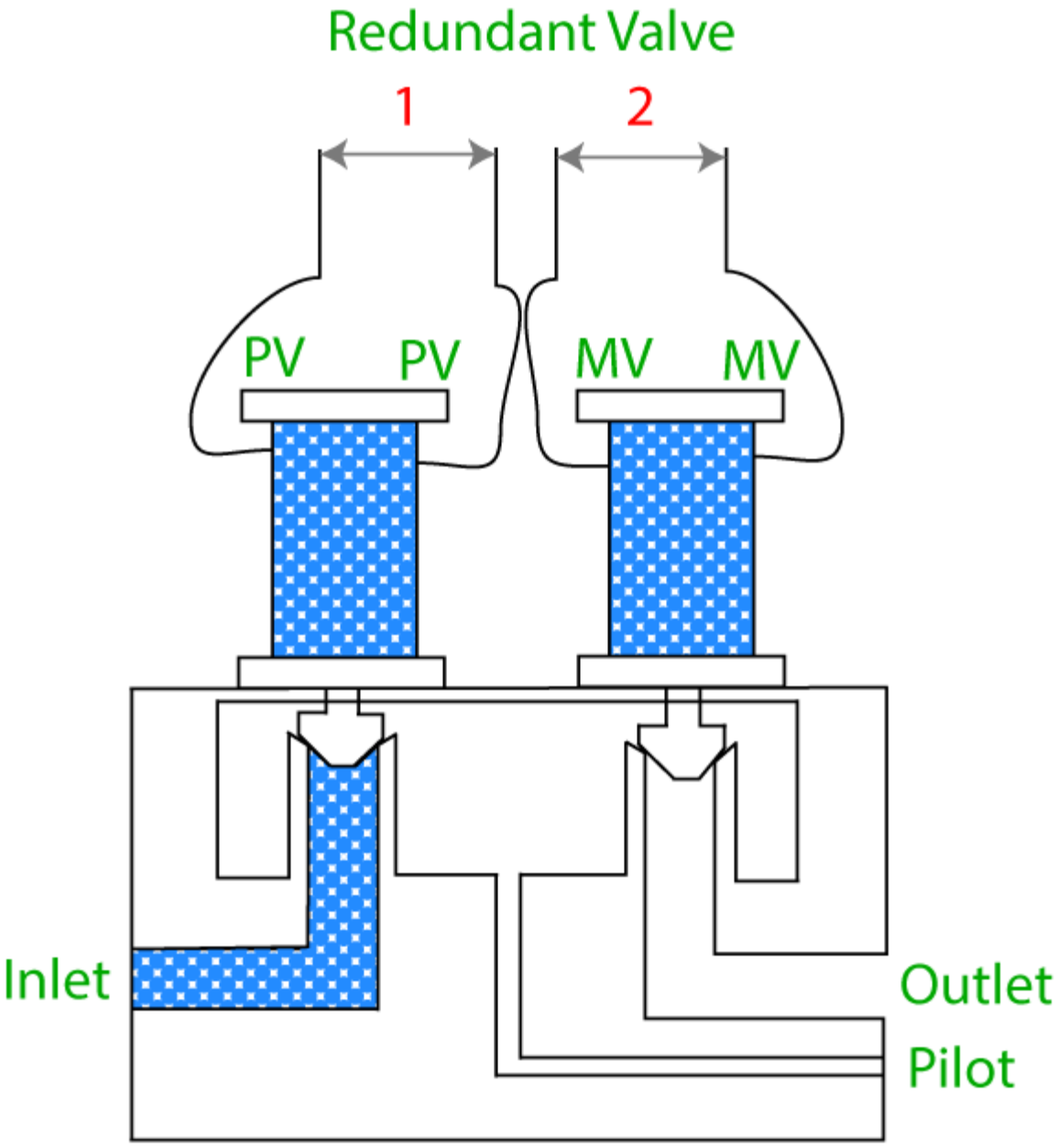

Referring to the above drawing what voltages would you expect to read at points 1 (PV - PV) and 2 (MV - MV) (the maximum voltage available is 24 volts) ?

Select one:

a.

1 = 24 volts , 2 = 0 volts

b.

1 = 12 volts , 2 = 24 volts

c.

1 = 0 volts , 2 = 0 volts

d.

1 = 24 volts , 2 = 24 volts

Feedback

Your answer is correct.

The correct answer is: 1 = 0 volts , 2 = 0 volts

Question **212**

Incorrect

Mark 0.00 out of 1.00

Flag question

Question text

Referring to the image below , this is an example of which one of the following control systems ?

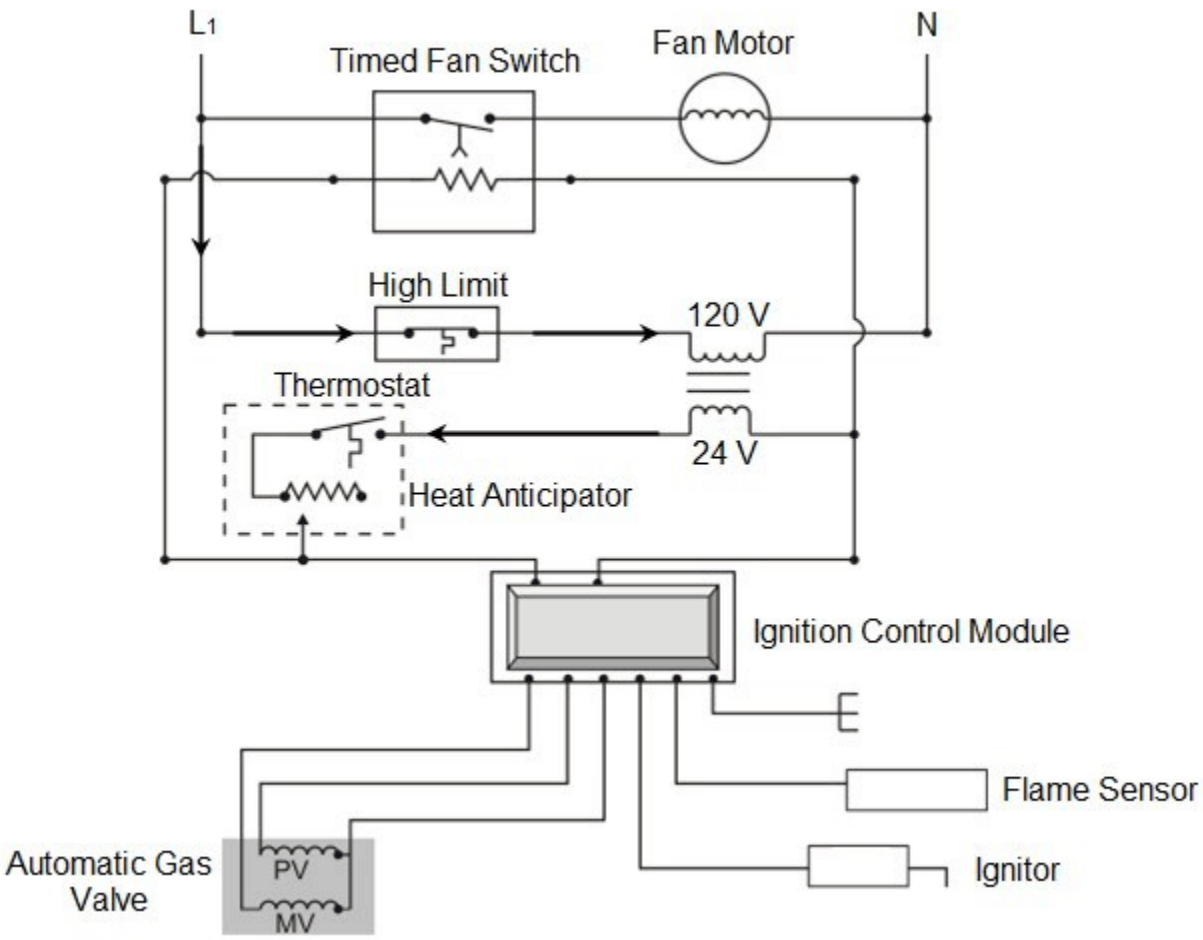

Select one:

a.

A flame safe guard for standing pilots

b.

An intermittent pilot ignition system

c.

An direct hot surface ignition system

d.

A direct spark ignition system

Feedback

Your answer is incorrect.

The correct answer is: An intermittent pilot ignition system

Question **213**

Incorrect

Mark 0.00 out of 1.00

Flag question

Question text

Referring to the below diagram , the voltage supplied to the igniter is

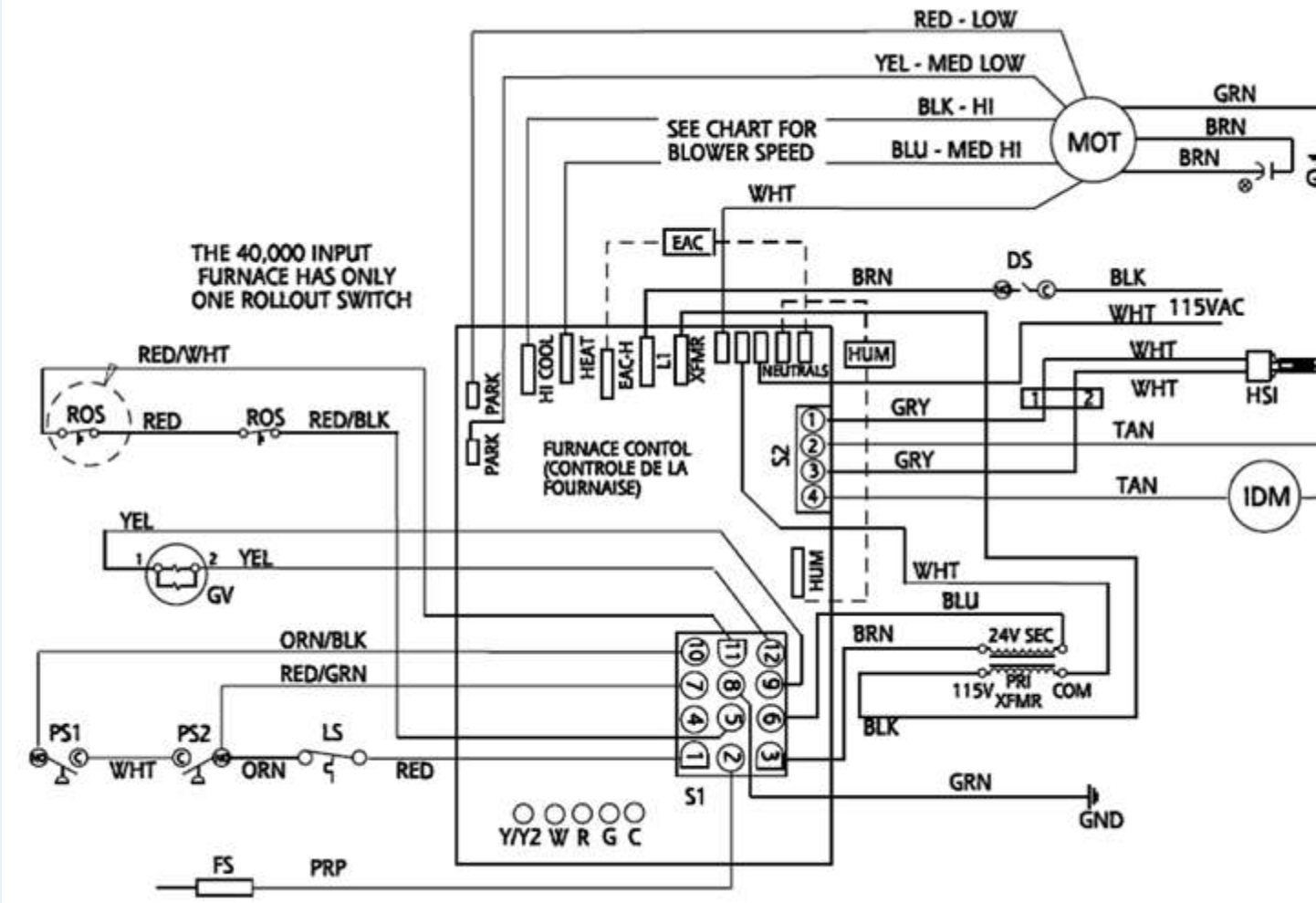

Select one:

a.

Millivolts as long as the unit is running

b.

24 volts AC during the ignition cycle only

c.

120 volts AC during the ignition cycle only

d.

24 volts DC from the ignition module during the ignition cycle

Feedback

Your answer is incorrect.

The correct answer is: 120 volts AC during the ignition cycle only

Question **214**

Incorrect

Mark 0.00 out of 1.00

Flag question

Question text

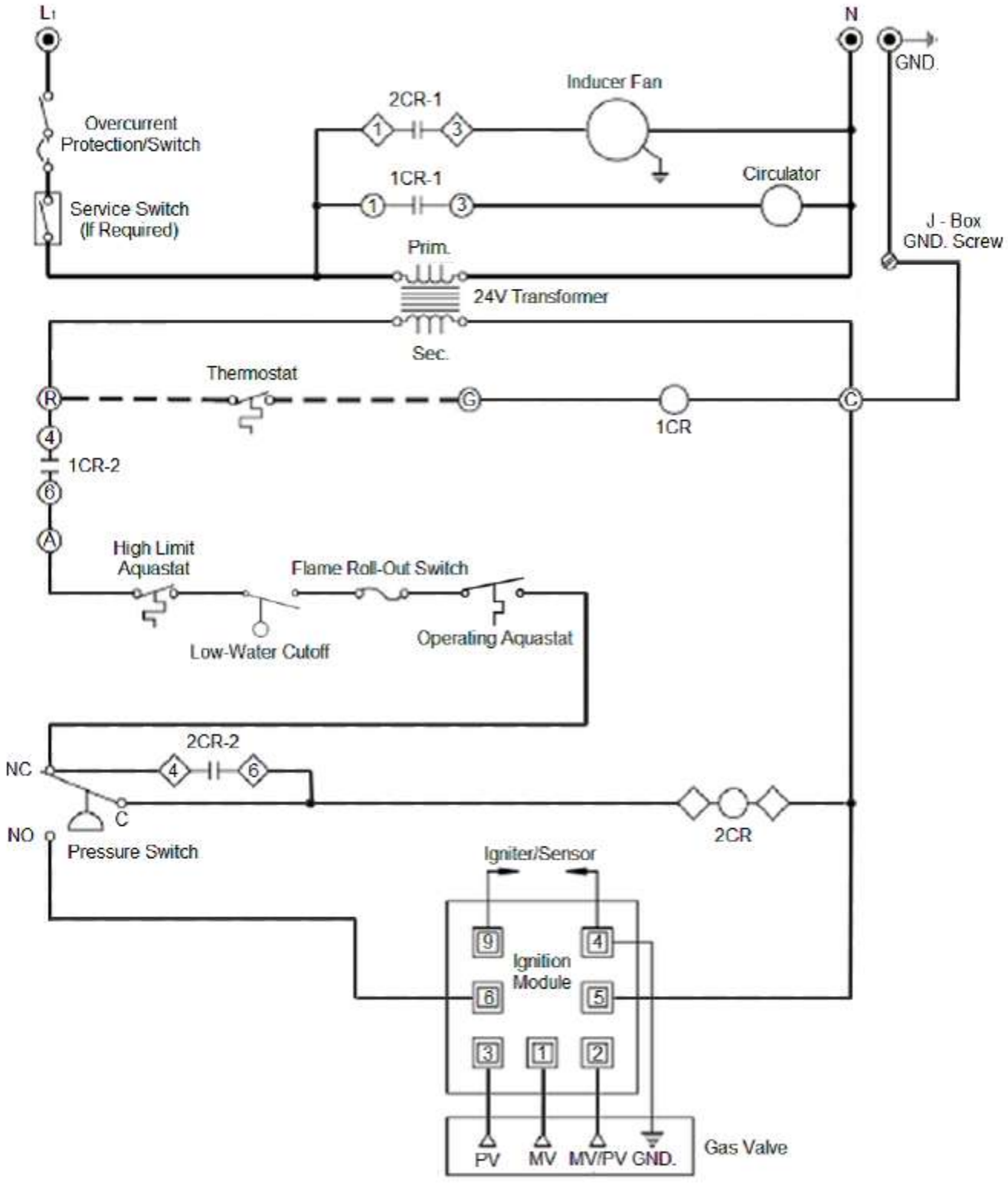

Referring to the above drawing , which one of the following devices will energize the ignition module?

Select one:

a.

The thermostat pressure switch

b.

The combustion blower limit switch

c.

The combustion blower pressure switch

d.

The low water cut-off switch

Feedback

Your answer is incorrect.

The correct answer is: The combustion blower pressure switch

Question **215**

Correct

Mark 1.00 out of 1.00

Flag question

Question text

Referring to the drawing above which of the following sequences of operation will occur after the 2CR coil is energized ?

Select one:

a.

Inducer fan is energized which changes the position of the pressure switch

b.

Thermostat opens which ends heating cycle

c.

Pressure switch changes position which energizes the inducer fan

d.

Control board is energized which activates the inducer fan

Feedback

Your answer is correct.

The correct answer is: Inducer fan is energized which changes the position of the pressure switch

Question **216**

Correct

Mark 1.00 out of 1.00

Flag question

Question text

If the voltage is kept constant and the resistance is raised the amperage will :

Select one:

a.

Increase

b.

Remain constant

c.

Fluctuate constantly

d.

Decrease

Feedback

Your answer is correct.

The correct answer is: Decrease

Question **217**

Incorrect

Mark 0.00 out of 1.00

Flag question

Question text

One thousand millivolts equals which one of the following voltages ?

Select one:

a.

10 volts

b.

1000 volts

c.

100 volts

d.

One volt

Feedback

Your answer is incorrect.

The correct answer is: One volt

Question **218**

Correct

Mark 1.00 out of 1.00

Flag question

Question text

The term continuity testing means :

Select one:

a.

Testing cut-in and cut-out times for automatic controls

b.

Checking operating of a warm air heating system for continuous comfort conditions

c.

Checking operating time of appliances

d.

Proving a continuous conducting path in an electrical circuit

Feedback

Your answer is correct.

The correct answer is: Proving a continuous conducting path in an electrical circuit

Question **219**
Incorrect

Mark 0.00 out of 1.00

Flag question

Question text
The measurement of resistance to the flow of electricity is measured in

Select one:

a.

Ohms

b.

Watts

c.

Volts

d.

Amperes

Feedback
Your answer is incorrect.

The correct answer is: Ohms

Question **220**
Correct

Mark 1.00 out of 1.00

Flag question

Question text

Two common types of electrical current are :

Select one:

a.

Direct and alternating

b.

Single phase and poly phase

c.

Alternating and poly phase

d.

Direct and single phase

Feedback

Your answer is correct.

The correct answer is: Direct and alternating

Question **221**

Incorrect

Mark 0.00 out of 1.00

Flag question

Question text

Most control transformers used in heating and air conditioning appliances reduce the primary voltage supply to

Select one:

a.

3 volts

b.

6 volts

c.

12 volts

d.

24 volts

Feedback

Your answer is incorrect.

The correct answer is: 24 volts

Question **222**

Correct

Mark 1.00 out of 1.00

Flag question

Question text

A blown fuse may indicate that

Select one:

a.

The neutral conductor is connected to the grounding conductor

b.

The conductors are larger than required

c.

The wire is loose from a connection

d.

There is a short in the wiring

Feedback

Your answer is correct.

The correct answer is: There is a short in the wiring

Question **223**

Correct

Mark 1.00 out of 1.00

Flag question

Question text

An anticipator on a room thermostat is designed to :

Select one:

a.

Compensate for variations in room temperature

b.

Compensate for variations in voltage

c.

Narrow the range of operating temperatures

d.

Give more sensitive and even temperature control and narrow the differential

Feedback

Your answer is correct.

The correct answer is: Give more sensitive and even temperature control and narrow the differential

Question **224**

Correct

Mark 1.00 out of 1.00

Flag question

Question text

To determine the correct heat anticipator setting on a 24 volt thermostat one must

Select one:

a.

Multiply the voltage of the thermostat by the amperage

b.

Determine the setting from the amperage rating indicated on the gas valve or control module or included in the certified manufacturer's installation instructions

c.

Find it by trail and error

d.

Ask an electrician

Feedback

Your answer is correct.

The correct answer is: Determine the setting from the amperage rating indicated on the gas valve or control module or included in the certified manufacturer's installation instructions

Question **225**

Incorrect

Mark 0.00 out of 1.00

Flag question

Question text

Regulations require 2 pressure switches to be installed on steam boilers. One as an operating control and the other as a high pressure limit. These controls are wired in a :

Select one:

a.

Series control valve circuit in parallel with one another

b.

Parallel control valve circuit in parallel with one another

c.

Series control valve circuit in series with one another

d.

Parallel control valve circuit in series with one another

Feedback

Your answer is incorrect.

The correct answer is: Series control valve circuit in series with one another

Question **226**

Correct

Mark 1.00 out of 1.00

Flag question

Question text

Referring to the drawing below , if this transformer is in phase , the voltage readings across L1 and R will be

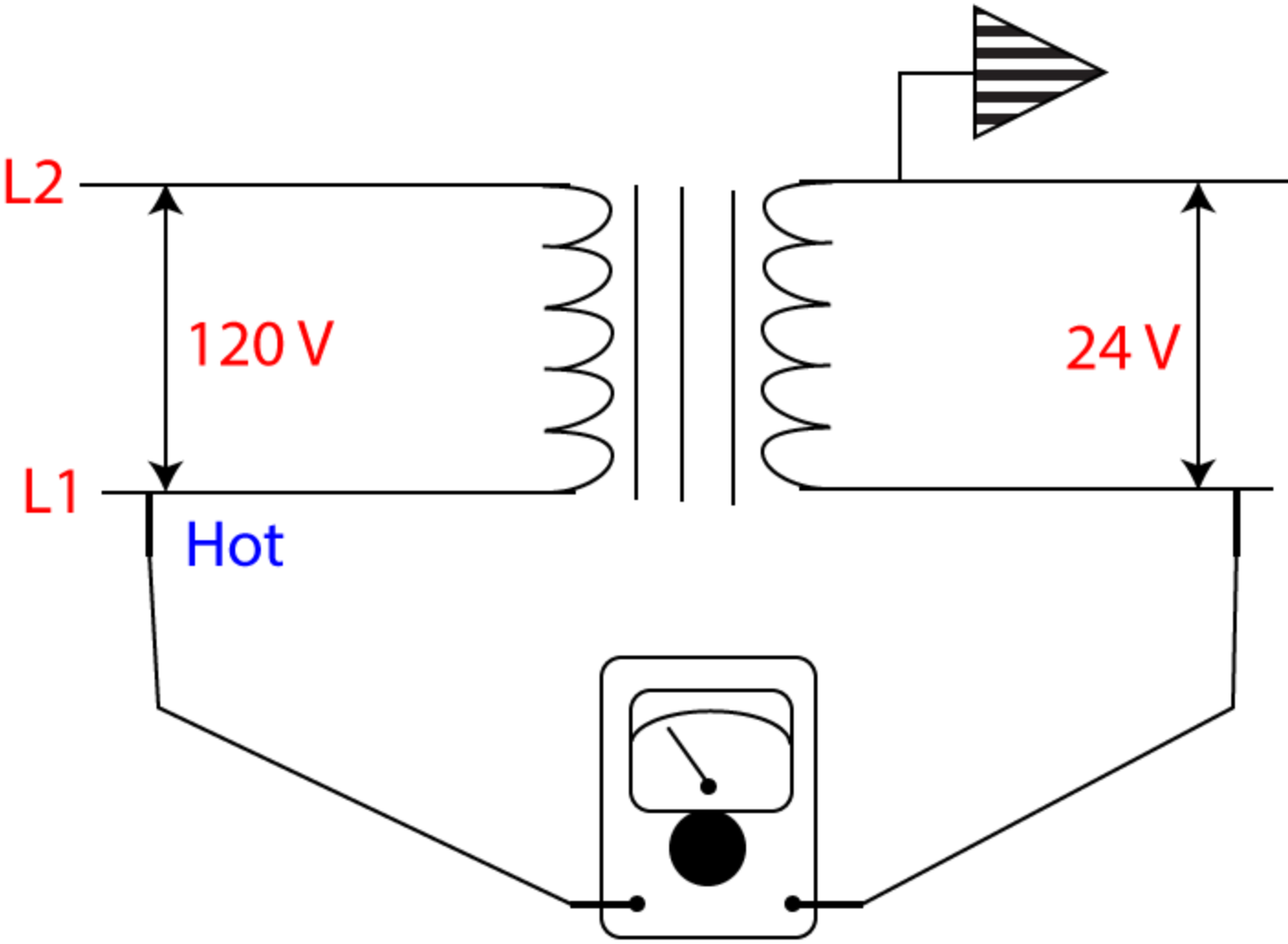

Select one:

a.

120 volts AC

b.

24 volts AC

c.

144 volts AC

d.

96 volts AC

Feedback

Your answer is correct.

The correct answer is: 96 volts AC

Question **227**

Incorrect

Mark 0.00 out of 1.00

Flag question

Question text

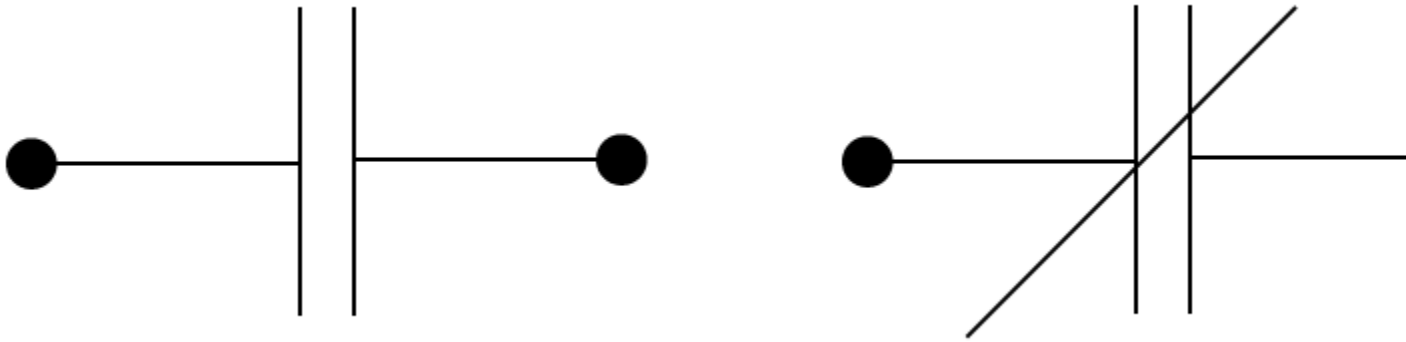

Referring to the diagram above , this electrical symbol represents which one of the following electrical components ?

Select one:

a.

A variable resistor

b.

An adjustable pressure switch

c.

Electrical contacts

d.

A centrifugal switch

Feedback

Your answer is incorrect.

The correct answer is: Electrical contacts

Question **228**

Correct

Mark 1.00 out of 1.00

Flag question

Question text

Use this link for the next 3 questions.

https://pvc.school/pluginfile.php/6664/question/questiontext/980189/228/14098/mara%20voltage%20readings.pdf

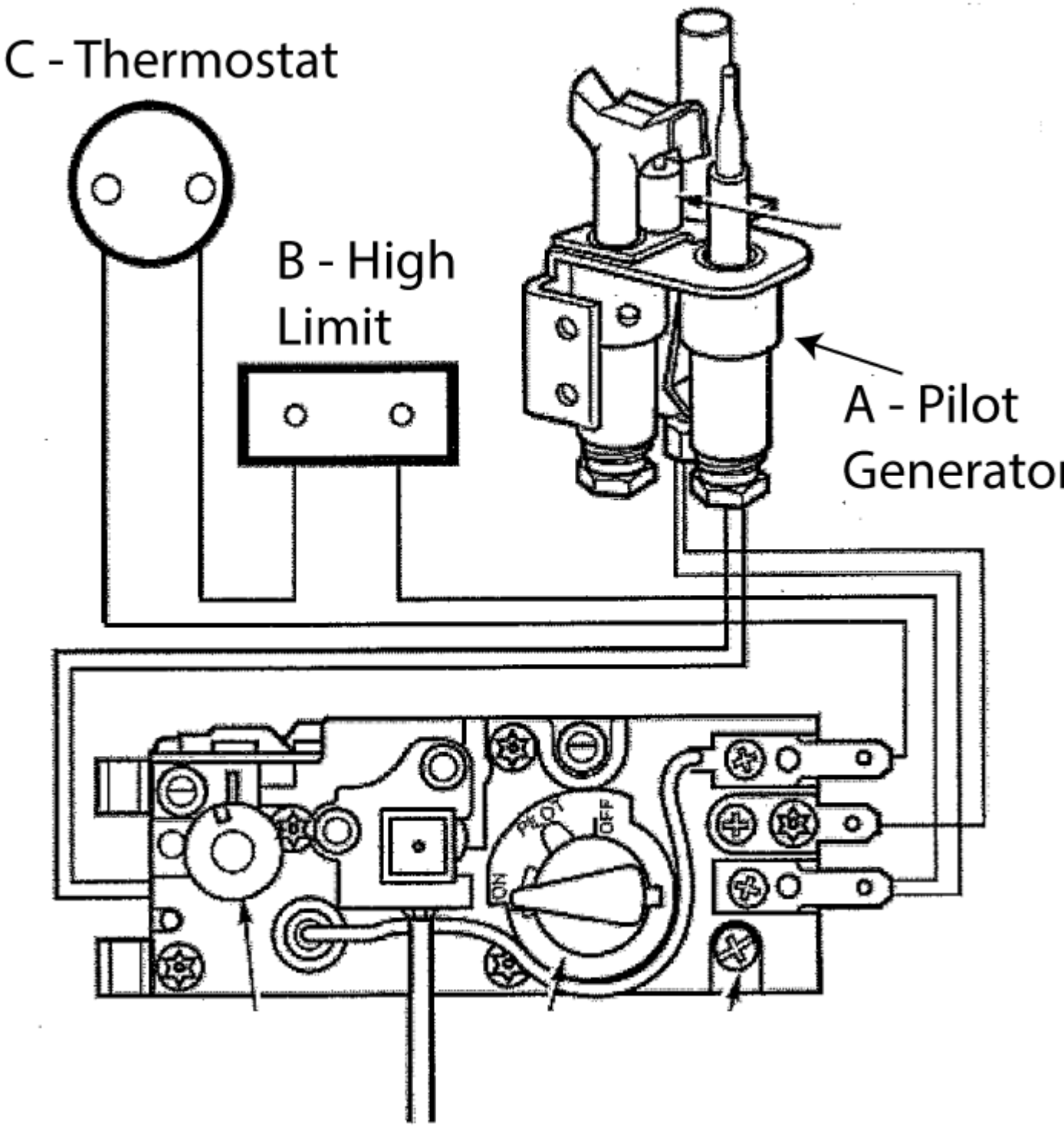

Determine the expected minimum voltage reading at point A

Select one:

a.

140 mV

b.

260 mV

c.

80 mV

d.

100 mV

Feedback

Your answer is correct.

The correct answer is: 260 mV

Question **229**

Correct

Mark 1.00 out of 1.00

Flag question

Question text

Determine the expected maximum voltage reading at Point B

Select one:

a.

10 mV

b.

5 mV

c.

2 mV

d.

110 mV

Feedback

Your answer is correct.

The correct answer is: 10 mV

Question **230**

Incorrect

Mark 0.00 out of 1.00

Flag question

Question text

Determine the expected maximum voltage reading at Point C. The device has a heat anticipator.

Select one:

a.

260 mV

b.

30 mV

c.

10 mV

d.

110 mV

Feedback

Your answer is incorrect.

The correct answer is: 110 mV

Question **231**

Correct

Mark 1.00 out of 1.00

Flag question

Question text

What is the expected closed circuit reading when testing a thermocouple ?

Select one:

a.

2 mV

b.

30 mV

c.

5 mV

d.

15 mV

Feedback

Your answer is correct.

The correct answer is: 15 mV

Question **232**

Incorrect

Mark 0.00 out of 1.00

Flag question

Question text

During a drop out test , the reading on the multi-meter drops to zero millivolts and the electromagnet has not released. What would be the problem ?

Select one:

a.

Broken spring in the safety shut off valve

b.

The electromagnet has an alternate source of power and can not open

c.

There is no problem - this is acceptable

d.

The safety shut off valve is using a 24 volt transformer

Feedback

Your answer is incorrect.

The correct answer is: Broken spring in the safety shut off valve

Question **233**

Correct

Mark 1.00 out of 1.00

Flag question

Question text

How much of the thermocouple is to be enveloped by the pilot flame ?

Select one:

a.

3/8 to 1/2 inch of the thermocouple cold junction

b.

As much of the thermocouple as possible

c.

3/8 to 1/2 inch of the thermocouple hot junction

d.

1/2 to 3/4 inch of the thermocouple base

Feedback

Your answer is correct.

The correct answer is: 3/8 to 1/2 inch of the thermocouple hot junction

Question **234**

Correct

Mark 1.00 out of 1.00

Flag question

Question text

What is the maximum flame failure response time for a thermocouple ?

Select one:

a.

120 seconds

b.

60 seconds

c.

30 seconds

d.

90 seconds

Feedback

Your answer is correct.

The correct answer is: 90 seconds

Question **235**

Incorrect

Mark 0.00 out of 1.00

Flag question

Question text

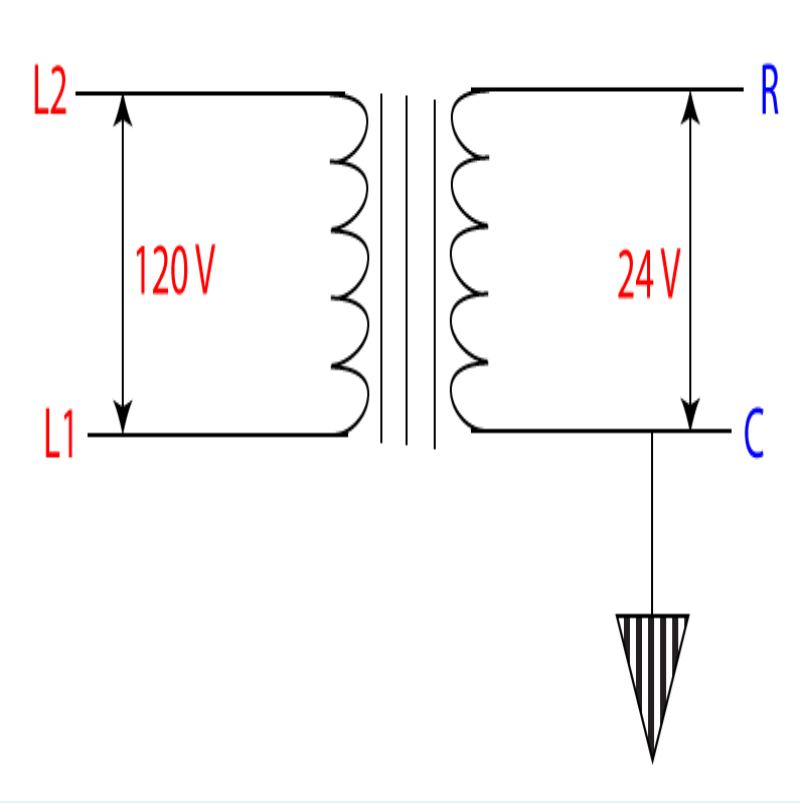

What is the expected voltage reading from points L1 to C ?

Select one:

a.

144 V

b.

0 V

c.

120 V

d.

96 V

Feedback

Your answer is incorrect.

The correct answer is: 120 V

Question **236**

Correct

Mark 1.00 out of 1.00

Flag question

Question text

What if anything, is required to phase the transformer?

Select one:

a.

Reverse L1 and L2

b.

Nothing required , it is in phase

c.

Reverse R and C

d.

Either (a) or (b)

Feedback

Your answer is correct.

The correct answer is: Nothing required , it is in phase

Question **237**

Correct

Mark 1.00 out of 1.00

Flag question

Question text

Flame rods use the principle of

Select one:

a.

UV radiation and an amplified current

b.

All the options are correct

c.

flame ionization and a rectified current

d.

Quenching and an amplified current

Feedback

Your answer is correct.

The correct answer is: flame ionization and a rectified current

Question **238**

Not answered

Marked out of 1.00

Flag question

Question text

What is the most common flame safeguard found on residential appliances with electronic ignition systems ?

Select one:

a.

Flame rod

b.

Thermocouple

c.

Ultraviolet detector

d.

Infrared detector

Feedback

Your answer is incorrect.

The correct answer is: Flame rod

Question **239**

Not answered

Marked out of 1.00

Flag question

Question text

A flame rod requires a minimum effective grounding area of

Select one:

a.

4 : 1

b.

15 : 1

c.

20 : 1

d.

1 : 1

Feedback

Your answer is incorrect.

The correct answer is: 4 : 1

Question **240**

Not answered

Marked out of 1.00

Flag question

Question text

If the length of a conductor (wire) is increased the resistance will

Select one:

a.

Decrease

b.

Remain constant

c.

Fluctuate constantly

d.

Increase

Feedback

Your answer is incorrect.

The correct answer is: Increase

Question **241**

Not answered

Marked out of 1.00

Flag question

Question text

Automatic gas control circuits are never designed , rated or operated by

Select one:

a.

Millivoltage using thermocouples

b.

120 V

c.

Millivoltage using thermopiles

d.

24 V

Feedback

Your answer is incorrect.

The correct answer is: Millivoltage using thermocouples

Question **242**

Not answered

Marked out of 1.00

Flag question

Question text

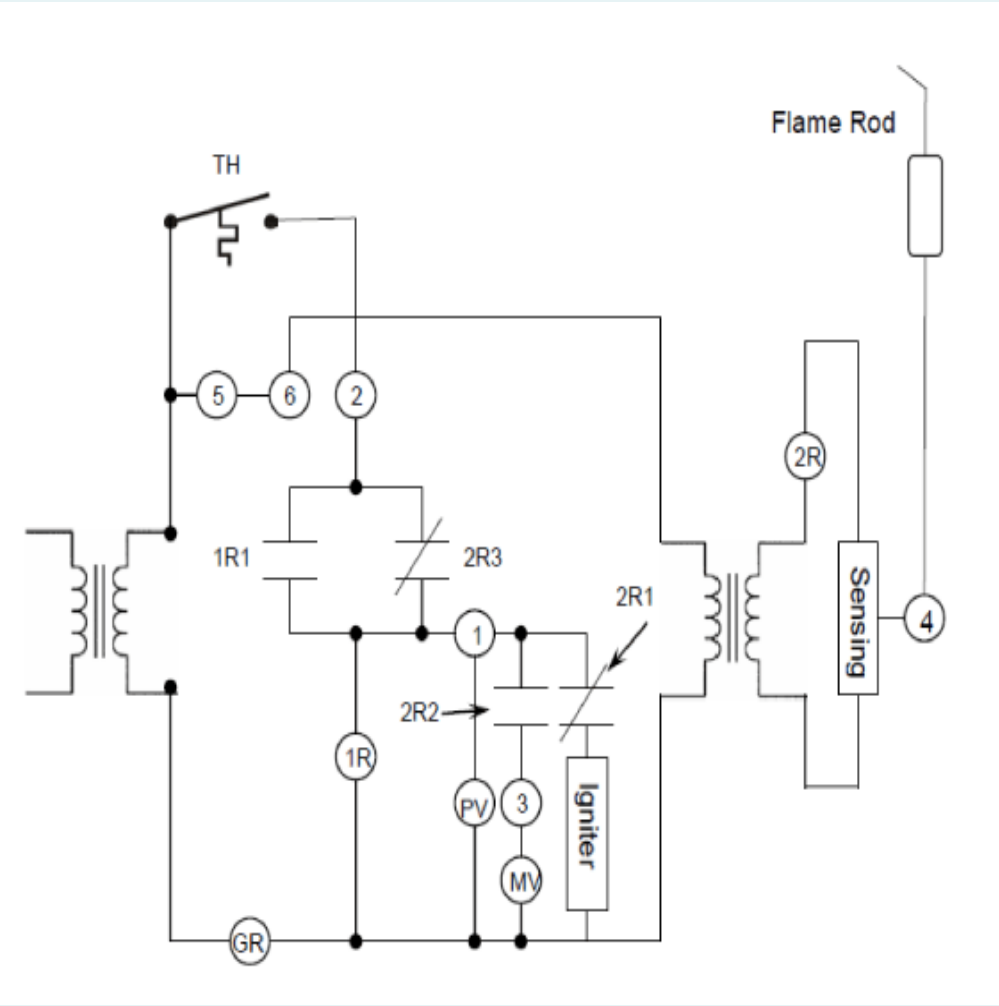

Referring to the drawing illustrated above the sensing circuit is

Select one:

a.

Never monitored

b.

Continuously monitored

c.

Totally independent of the rest of the circuit

d.

Occasionally monitored

Feedback

Your answer is incorrect.

The correct answer is: Continuously monitored

Question **243**

Not answered

Marked out of 1.00

Flag question

Question text

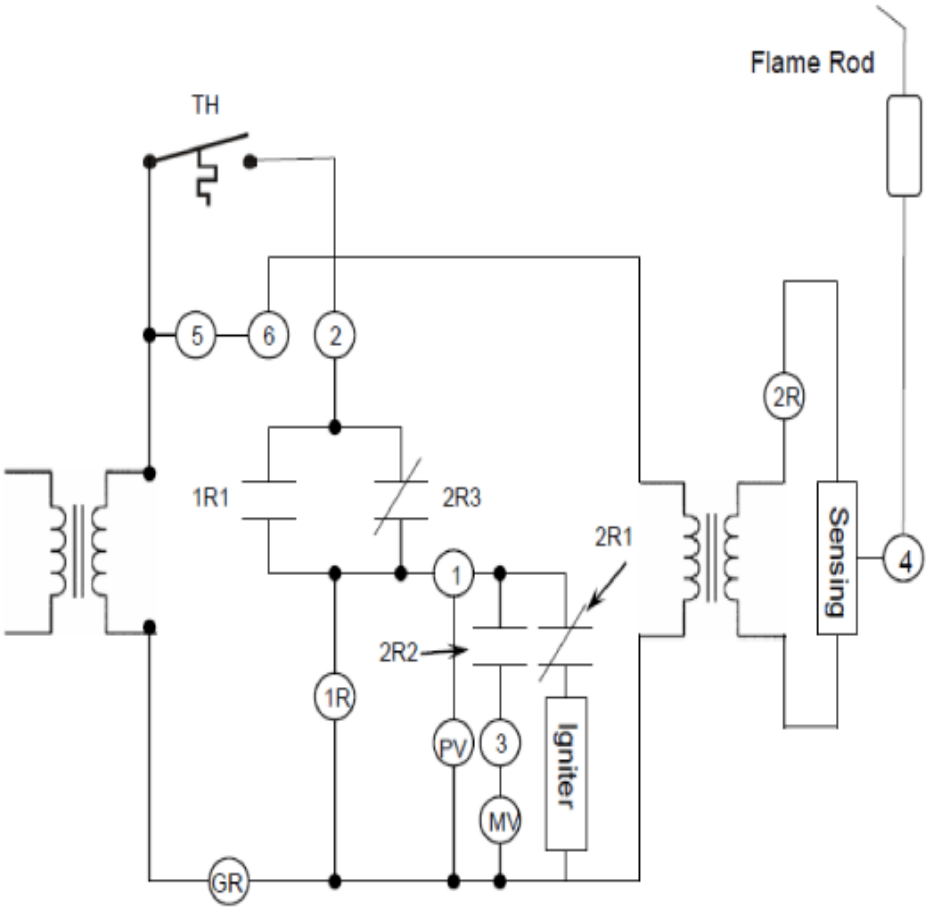

Referring to the drawing illustrated above, the flame safeguard is a/an

Select one:

a.

Flame rod

b.

Thermocouple and pilot assembly

c.

Optical flame safeguard

d.

Pilot generator

Feedback

Your answer is incorrect.

The correct answer is: Flame rod

Question **244**

Not answered

Marked out of 1.00

Flag question

Question text

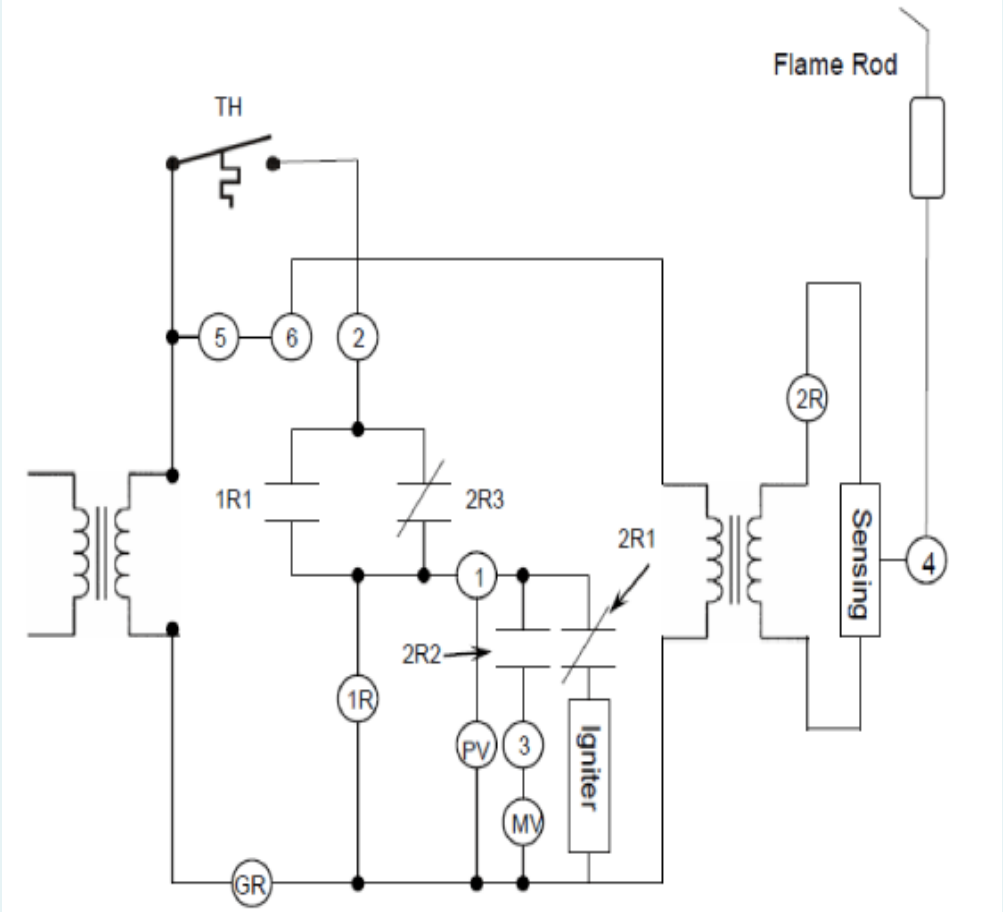

Referring to the drawing above the electrical circuits incorporate a/an

Select one:

a.

Continuous pilot

b.

Intermittent pilot

c.

Interrupted pilot

d.

Expanding pilot

Feedback

Your answer is incorrect.

The correct answer is: Intermittent pilot

Question **245**

Not answered

Marked out of 1.00

Flag question

Question text

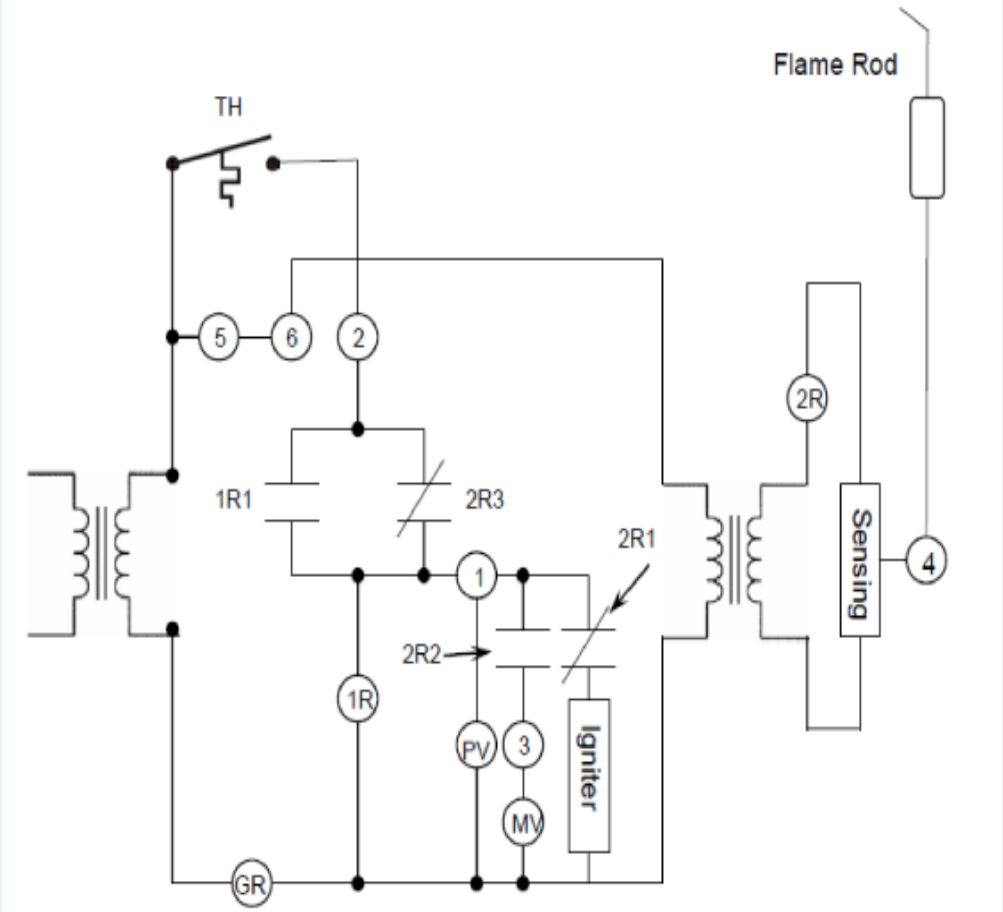

Referring to the drawing above, when relay coil 2R is energized. What happens next?

Select one:

a.

2R1 opens and stops ignition

b.

2R3 opens but power continues to flow to relay coil 1R through a closed 1R1

c.

All of the options are correct

d.

2R2 closes and opens the main gas valve

Feedback

Your answer is incorrect.

The correct answer is: All of the options are correct

Question **246**

Not answered

Marked out of 1.00

Flag question

Question text

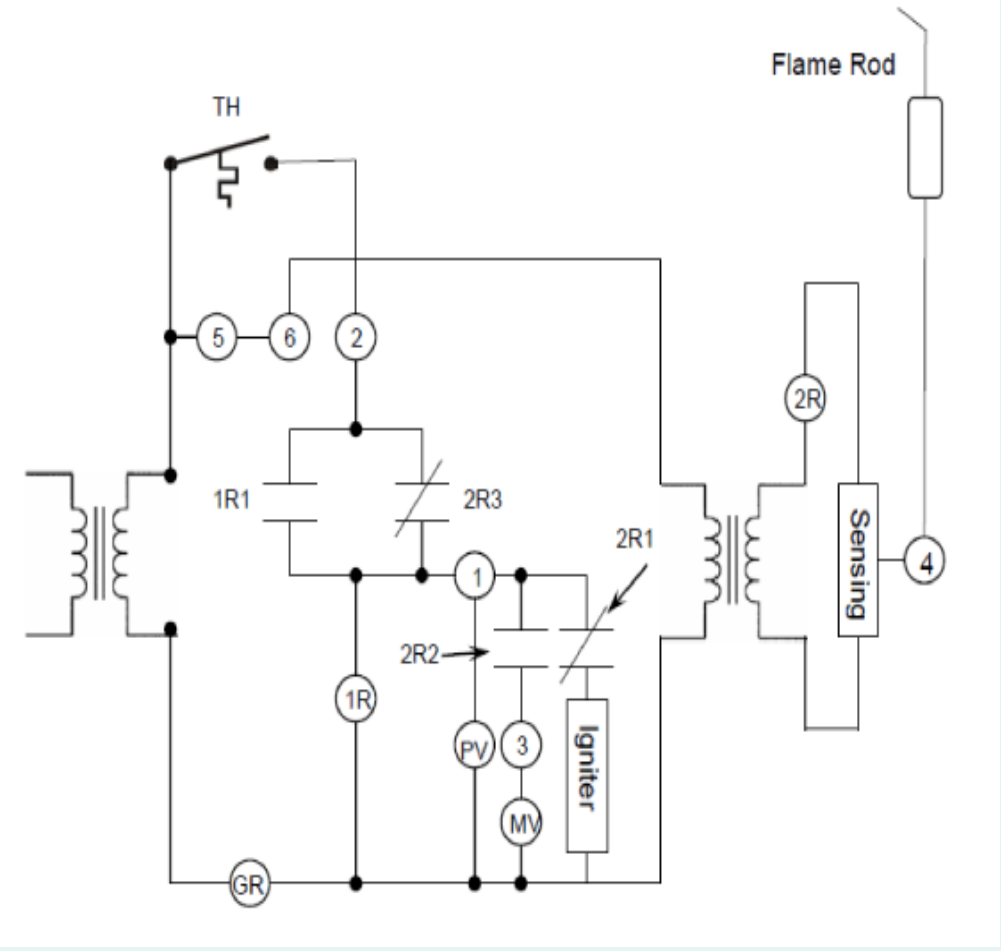

Referring to the drawing above , if the flame sensor detects the absence of the flame during the running cycle

Select one:

a.

Relays 2R1 , 2R2 and 2R3 will reverse position

b.

All the options are correct

c.

The main gas valve will remain open during re-ignition

d.

The pilot valve will re-open for ignition

Feedback

Your answer is incorrect.

The correct answer is: Relays 2R1 , 2R2 and 2R3 will reverse position

Question **247**

Not answered

Marked out of 1.00

Flag question

Question text

Calculate the voltage drop across Point A in the drawing illustrated.

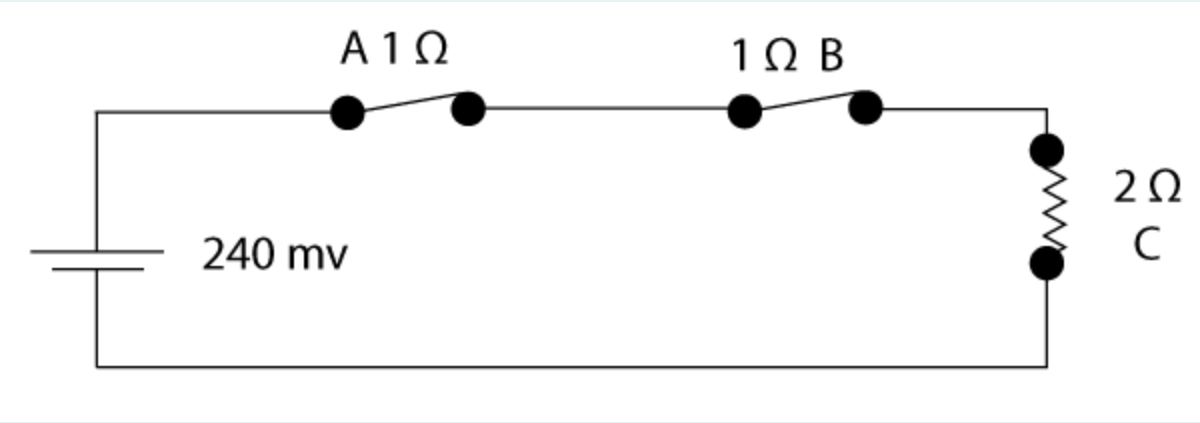

Select one:

a.

120 mv

b.

240 mv

c.

60 mv

d.

0 mv

Feedback

Your answer is incorrect.

The correct answer is: 60 mv

Question **248**

Not answered

Marked out of 1.00

Flag question

Question text

Which of the following is normally open ?

Select one:

a.

A solenoid valve

b.

Auto-fan switch

c.

High limit switch

d.

Flame roll-out switch

Feedback

Your answer is incorrect.

The correct answer is: Auto-fan switch

Question **249**

Not answered

Marked out of 1.00

Flag question

Question text

On a furnace the thermostat is wired in _____ with the automatic gas valve.

Select one:

a.

Series

b.

Series / parallel

c.

Parallel

d.

Series & Parallel is acceptable

Feedback

Your answer is incorrect.

The correct answer is: Series

Question **250**
Not answered

Marked out of 1.00

Flag question

Question text
If the end switch on the automatic dampers of a D F M A unit failed to close what would happen next ?

Select one:

a.

Main valve would open to low-fire

b.

Nothing would happen

c.

Ignition sequence would initiate

d.

Blower motor would be powered

Feedback
Your answer is incorrect.

The correct answer is: Nothing would happen

Question **251**
Not answered

Marked out of 1.00

Flag question

Question text

Furnace fan control contacts open when circulating air

Select one:

a.

Starts flowing

b.

Warms up

c.

Stops flowing

d.

Cools down

Feedback

Your answer is incorrect.

The correct answer is: Cools down

Question **252**

Not answered

Marked out of 1.00

Flag question

Question text

To check the high limit on a furnace for proper operation a gas fitter could

Select one:

a.

Turn down the thermostat and call for heat

b.

Disable the fan and call for heat

c.

Jump out the limit switch

d.

Turn down the operating limit and cycle on the furnace

Feedback

Your answer is incorrect.

The correct answer is: Disable the fan and call for heat

Question **253**

Not answered

Marked out of 1.00

Flag question

Question text

When installing a new thermostat the gas fitter would check the

Select one:

a.

Amperage designation on the thermostat and match it to the rating of the gas valve

b.

Voltage designation on the thermostat

c.

Proper location of the thermostat to ensure that it is monitoring the ambient house temperature

d.

All the options are correct

Feedback

Your answer is incorrect.

The correct answer is: All the options are correct

Question **254**

Not answered

Marked out of 1.00

Flag question

Question text

The maximum temperature rating of a flame rod is

Select one:

a.

2600 °F

b.

1200 ° F

c.

470 ° F

d.

1000 ° F

Feedback

Your answer is incorrect.

The correct answer is: 2600 °F

Question **255**

Not answered

Marked out of 1.00

Flag question

Question text

When checking a circuit for continuity you would have your multi-meter set for

Select one:

a.

Amps

b.

Watts

c.

Volts

d.

Ohms

Feedback

Your answer is incorrect.

The correct answer is: Ohms

Question **256**

Not answered

Marked out of 1.00

Flag question

Question text

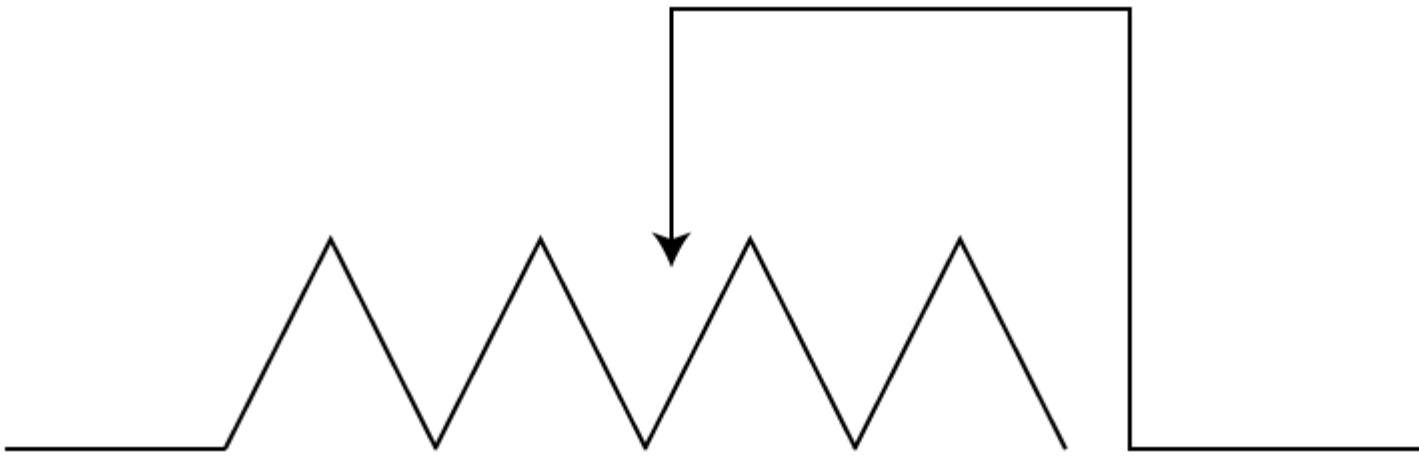

Referring to the diagram above , this electrical symbol represents which one of the following electrical components?

Select one:

a.

A junction plug

b.

A variable resistor

c.

An adjustable capacitor

d.

A tapped transformer

Feedback

Your answer is incorrect.

The correct answer is: A variable resistor

Question **257**

Not answered

Marked out of 1.00

Flag question

Question text

The principle of adding cathodic protection to an underground piping system is to allow what to corrode ?

Select one:

a.

All the options are correct

b.

The anode

c.

The cathode

d.

The electrolyte

Feedback

Your answer is incorrect.

The correct answer is: The anode

Question **258**

Not answered

Marked out of 1.00

Flag question

Question text

What type of plastic pipe is allowed to be used for underground gas piping ?

Select one:

a.

PVC

b.

ABS

c.

CPVC

d.

PE

Feedback

Your answer is incorrect.

6.2.13 (CSA 137.4)

The correct answer is: PE

Question **259**

Not answered

Marked out of 1.00

Flag question

Question text

The diameter of a drip pocket serving a four inch NPS gas pipe shall be

Select one:

a.

Three inches NPS in diameter

b.

Four inches NPS in diameter

c.

Not more than three inches NPS in diameter

d.

Equal to the diameter of the pipe it serves but not greater than two inches NPS in diameter which ever is less

Feedback

Your answer is incorrect.

6.13.2 (b)

The correct answer is: Equal to the diameter of the pipe it serves but not greater than two inches NPS in diameter which ever is less

Question **260**

Not answered

Marked out of 1.00

Flag question

Question text

A propane fired system operating at 11 inches w.c (2.74 kPa) is limited to a maximum pressure drop of

Select one:

a.

5.5 inches w.c (1.368 kPa)

b.

10 % of the initial load

c.

0.5 inches w.c (125 Pa)

d.

1 inch w.c (250 Pa)

Feedback

Your answer is incorrect.

The correct answer is: 1 inch w.c (250 Pa)

Question **261**

Not answered

Marked out of 1.00

Flag question

Question text

The above drawing illustrated is of a propane

Select one:

a.

Liquid withdrawal valve for a forklift

b.

Valve with overfill protection device

c.

Evacuation valve for large tanks

d.

Cylinder liquid withdrawal valve

Feedback

Your answer is incorrect.

The correct answer is: Valve with overfill protection device

Question **262**

Not answered

Marked out of 1.00

Flag question

Question text

When a piping or tubing system is to be purged to the outdoors the purging lines shall not terminate closer than how many feet from an air intake ?

Select one:

a.

10 feet (7.6 m)

b.

3 feet (0.9 m)

c.

25 feet (3 m)

d.

5 feet (1.5 m)

Feedback

Your answer is incorrect.

6.23.7

The correct answer is: 25 feet (3 m)

Question **263**

Not answered

Marked out of 1.00

Flag question

Question text

The maximum allowable pressure drop (per B149.1 code) in a low pressure propane domestic piping system is

Select one:

a.

0.5 inches w.c (125 Pa)

b.

10 % of initial inlet pressure

c.

5 inches w.c (1.25 kPa)

d.

1 inch w.c (250 Pa)

Feedback

Your answer is incorrect.

The correct answer is: 1 inch w.c (250 Pa)

Question **264**

Not answered

Marked out of 1.00

Flag question

Question text

The unthreaded portion of a gas line shall extend at least how far, through a floor ?

Select one:

a.

Two inches

b.

One pipe diameter

c.

Two pipe diameters

d.

One inch

Feedback

Your answer is incorrect.

6.12.2

The correct answer is: Two inches

Question **265**

Not answered

Marked out of 1.00

Flag question

Question text

Copper tubing gas system in residential installations must be identified at what intervals ?

Select one:

a.

10 feet (3.0 m)

b.

4 feet (1.22 m)

c.

6 feet (1.83 m)

d.

20 feet (6.0 m)

Feedback

Your answer is incorrect.

6.17.3

The correct answer is: 6 feet (1.83 m)

Question **266**

Not answered

Marked out of 1.00

Flag question

Question text

A 150 foot (45.7 m) length of 2 inch NPS gas piping operating at a pressure of 2 PSIG (14 kPa) shall be tested at

Select one:

a.

15 PSIG (100 kPa) for 1 hour

b.

50 PSIG (340kPa) for 1 minutes

c.

15 PSIG (100 kPa) for 15 minutes

d.

50 PSIG (340kPa) for 15 minutes

Feedback

Your answer is incorrect.

Table 6.3

The correct answer is: 15 PSIG (100 kPa) for 15 minutes

Question **267**

Not answered

Marked out of 1.00

Flag question

Question text

Fittings and accessories placed on propane tanks must be rated for at least

Select one:

a.

400 PSIG or 125 WOG (2758 kPa)

b.

125 PSIG or 250 WOG (863 kPa)

c.

125 PSIG or 400 WOG (863 kPa)

d.

250 PSIG or 400 WOG (1,725 kPa)

Feedback

Your answer is incorrect.

The correct answer is: 250 PSIG or 400 WOG (1,725 kPa)

Question **268**

Not answered

Marked out of 1.00

Flag question

Question text

A corrugated metal connector may be used to connect a suspended appliance providing its length does not exceed

Select one:

a.

1 foot (0.3 m)

b.

4 feet (1.2 m)

c.

2 feet (0.6 m)

d.

6 feet (1.8 m)

Feedback

Your answer is incorrect.

6.21.3 (b)

The correct answer is: 2 feet (0.6 m)

Question **269**

Not answered

Marked out of 1.00

Flag question

Question text

Piping used to convey propane in the vapor phase may be schedule 40 with threaded joints if the vapor pressure does not exceed

Select one:

a.

60 PSIG (413 kPa)

b.

125 PSIG (862 kPa)

c.

11 inches w.c (2.74 kPa)

d.

5 PSIG (34 kPa)

Feedback

Your answer is incorrect.

6.2.3

The correct answer is: 125 PSIG (862 kPa)

Question **270**

Not answered

Marked out of 1.00

Flag question

Question text

In order to detect flaws or pinholes in the pipes exterior coating, what kind of test is performed ?

Select one:

a.

Visual

b.

Jeep

c.

Hole

d.

Ultrasonic

Feedback

Your answer is incorrect.

The correct answer is: Jeep

Question **271**

Not answered

Marked out of 1.00

Flag question

Question text

A corrugated metal connector used to connect a range shall not exceed

Select one:

a.

3 feet (0.9 m)

b.

4 feet (1.2 m)

c.

6 feet (1.8 m)

d.

2 feet (0.6 m)

Feedback

Your answer is incorrect.

6.21.3

The correct answer is: 6 feet (1.8 m)

Question **272**

Not answered

Marked out of 1.00

Flag question

Question text

When a gas line passes from one building to another building , it is necessary to have a gas valve at

Select one:

a.

The point where the branch connects to the main line

b.

The point of entry to the second building

c.

The point of exit from the first building

d.

Both the exit from the first building and the entry of the second building

Feedback

Your answer is incorrect.

6.18.8

The correct answer is: Both the exit from the first building and the entry of the second building

Question **273**

Not answered

Marked out of 1.00

Flag question

Question text

A metal used for a sacrificial anode is :

Select one:

a.

Magnesium

b.

Brass

c.

Manganese

d.

Steel

Feedback

Your answer is incorrect.

The correct answer is: Magnesium

Question **274**

Not answered

Marked out of 1.00

Flag question

Question text

The minimum diameter of steel pipe which must be welded is

Select one:

a.

2 inches NPS

b.

2 1/2 inches NPS

c.

3 inches NPS

d.

4 inches NPS

Feedback

Your answer is incorrect.

6.9.2

The correct answer is: 2 1/2 inches NPS

Question **275**

Not answered

Marked out of 1.00

Flag question

Question text

The difference in pressure from the inlet gas pressure and the outlet gas pressure of a piping system is known as

Select one:

a.

Pressure drop

b.

Manifold pressure

c.

Static pressure

d.

Friction loss

Feedback

Your answer is incorrect.

The correct answer is: Pressure drop

Question **276**

Not answered

Marked out of 1.00

Flag question

Question text

The maximum allowable pressure drop (according to the B149.1 code) on a gas piping system with an operating pressure of 7 to 14 inches w.c (1.75 - 3.5 kPa) shall not exceed

Select one:

a.

1 inch w.c (250 kPa)

b.

5 1/2 inches w.c (1.37 kPa)

c.

1/2 inches w.c (125 kPa)

d.

10% of initial inlet pressure

Feedback

Your answer is incorrect.

Table A.2

The correct answer is: 1 inch w.c (250 kPa)

Question **277**

Not answered

Marked out of 1.00

Flag question

Question text

The unthreaded portion of a gas line shall extend at least how far through a wall ?

Select one:

a.

One inch (25 mm)

b.

Two inches (50 mm)

c.

One pipe diameter

d.

Two pipe diameters

Feedback

Your answer is incorrect.

6.12.2

The correct answer is: One inch (25 mm)

Question **278**

Not answered

Marked out of 1.00

Flag question

Question text

In what direction does the current flow in a cathodically protected piping system ?

Select one:

a.

From the anode to the cathode and cathode to the anode because the system is producing AC current

b.

Neither the anode to the cathode and cathode to the anode because by adding cathodic protection , current flow is completely stopped

c.

From the cathode to the anode

d.

From the anode to the cathode

Feedback

Your answer is incorrect.

The correct answer is: From the anode to the cathode

Question **279**

Not answered

Marked out of 1.00

Flag question

Question text

Group 1

Group 2

When flared copper tubing is used in a piping system which of the above group of fittings should be used ?

Select one:

a.

Group 2 may be used on propane systems only

b.

Group 1 should be used at all times

c.

Either Group 1 or 2 may be used if permitted by the inspector

d.

Group 2 may be used for low pressure systems only

Feedback

Your answer is incorrect.

6.2.5

The correct answer is: Group 1 should be used at all times

Question **280**

Not answered

Marked out of 1.00

Flag question

Question text

A 1/2 inch NPS gas line must be supported at least every

Select one:

a.

5 feet (1.5 m)

b.

6 feet (1.8 m)

c.

8 feet (2.4 m)

d.

7 feet (2.1 m)

Feedback

Your answer is incorrect.

Table 6.2

The correct answer is: 6 feet (1.8 m)

Question **281**

Not answered

Marked out of 1.00

Flag question

Question text

The maximum length of a hose used to permanently connect an unvented appliance shall not exceed

Select one:

a.

18 feet (5.5 m)

b.

10 feet (3 m)

c.

20 feet (6 m)

d.

6 feet (1.8 m)

Feedback

Your answer is incorrect.

6.20.3

The correct answer is: 10 feet (3 m)

Question **282**

Not answered

Marked out of 1.00

Flag question

Question text

A construction heater may be connected to the gas supply with an approved hose providing its length does not exceed

Select one:

a.

15 feet (4.6 m)

b.

75 feet (30 m)

c.

50 feet (15 m)

d.

10 feet (3 m)

Feedback

Your answer is incorrect.

6.20.3 (c)

The correct answer is: 75 feet (30 m)

Question **283**

Not answered

Marked out of 1.00

Flag question

Question text

If the flow rate through a pipe is increased the pressure drop will

Select one:

a.

Decrease

b.

Be inversely proportional

c.

Remain constant

d.

Increase

Feedback

Your answer is incorrect.

The correct answer is: Increase

Question **284**

Not answered

Marked out of 1.00

Flag question

Question text

When underground piping is located under a commercial driveway , it must be buried to a minimum depth of :

Select one:

a.

18 inches

b.

24 inches

c.

12 inches

d.

15 inches

Feedback

Your answer is incorrect.

6.15.4

The correct answer is: 24 inches

Question **285**

Not answered

Marked out of 1.00

Flag question

Question text

If malleable iron bushings are to be used in a gas piping system they must

Select one:

a.

Change at least two pipe sizes

b.

Be used only on the inlet of the pressure regulator

c.

Be of eccentric design

d.

Be used when a change of only one pipe size is required

Feedback

Your answer is incorrect.

6.9.10

The correct answer is: Change at least two pipe sizes

Question **286**

Not answered

Marked out of 1.00

Flag question

Question text

What is the maximum horizontal spacing of support required for 3/4 inch O.D. copper tubing ?

Select one:

a.

15 feet (5 m)

b.

10 feet (3 m)

c.

6 feet (2 m)

d.

8 feet (2.5 m)

Feedback

Your answer is incorrect.

Table 6.2

The correct answer is: 6 feet (2 m)

Question **287**

Not answered

Marked out of 1.00

Flag question

Question text

Tubing used on 2 PSIG gas in a single family dwelling shall be identified by a band of yellow paint or tape at intervals not exceeding

Select one:

a.

3 feet

b.

10 feet

c.

20 feet

d.

6 feet

Feedback

Your answer is incorrect.

6.17.3

The correct answer is: 6 feet

Question **288**

Not answered

Marked out of 1.00

Flag question

Question text

When air , oxygen or the gases under pressure are used in connection with the gas supply _____ shall be provided as close as practicable to the point of interconnection

Select one:

a.

Ball valves

b.

A fire extinguisher

c.

Plug valves

d.

Check valves

Feedback

Your answer is incorrect.

6.8.5

The correct answer is: Check valves

Question **289**

Correct

Mark 1.00 out of 1.00

Flag question

Question text

Furnace fan control contacts open when circulating air

Select one:

a.

None of the options are correct

b.

Cools down

c.

Warm up

d.

Stops flowing

Feedback

Your answer is correct.

The correct answer is: Cools down

Question **290**

Correct

Mark 1.00 out of 1.00

Flag question

Question text

To decrease the input of a gas burner , you would

Select one:

a.

Reduce the manifold pressure

b.

Drill the existing orifice

c.

Turn down the adjusting screw of the regulator

d.

Reduce the primary air to the burner

Feedback

Your answer is correct.

The correct answer is: Reduce the manifold pressure

Question **291**
Incorrect

Mark 0.00 out of 1.00

Flag question

Question text
On a previously correctly operating furnace , short cycling starts on a high limit set at 200 ° F (93 ° C). The most likely cause would be

Select one:

a.

Dirty air filters

b.

High limit set too low

c.

Undersized cold air return

d.

A short circuit in the high limit

Feedback
Your answer is incorrect.

The correct answer is: Dirty air filters

Question **292**
Incorrect

Mark 0.00 out of 1.00

Flag question

Question text

A forced air furnace high limit control shuts off the

Select one:

a.

Burner

b.

Electricity

c.

Compressor

d.

Blower

Feedback

Your answer is incorrect.

The correct answer is: Burner

Question **293**

Correct

Mark 1.00 out of 1.00

Flag question

Question text

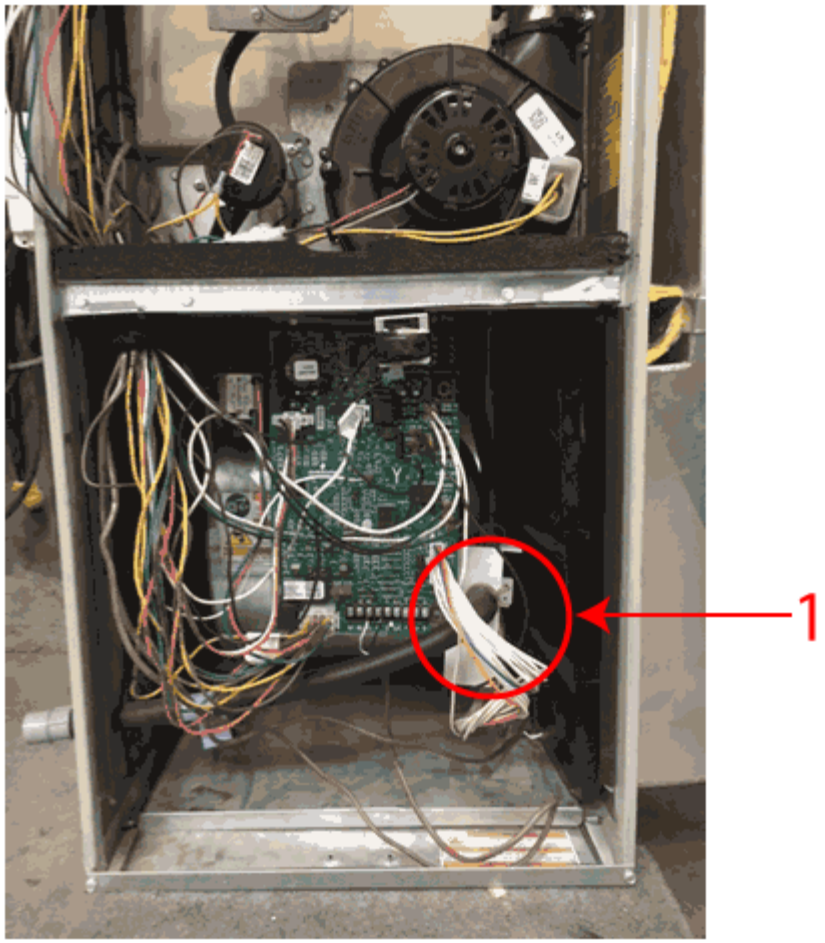

Referring to the above drawing , what is device 1 ?

Select one:

a.

Main power supply junction box

b.

Main blower fan motor

c.

Condensate trap

d.

Circulating air blower fan control box

Feedback

Your answer is correct.

The correct answer is: Condensate trap

Question **294**

Incorrect

Mark 0.00 out of 1.00

Flag question

Question text

Troubleshooting Hot Surface Ignition (H S I) systems includes which of the following ?

Select one:

a.

Cleaning orifices

b.

Adjusting the pilot flame

c.

Measure current of igniter

d.

Setting the spark gap

Feedback

Your answer is incorrect.

The correct answer is: Measure current of igniter

Question **295**
Correct

Mark 1.00 out of 1.00

Flag question

Question text

The diagram above shows what kind of instruments ?

Select one:

a.

Velometer indicating a velocity in Ft./min

b.

Manometer indicating absolute pressures

c.

Manometer indicating inches water column

d.

Pressure differential gauge showing atmospheric pressure

Feedback

Your answer is correct.

The correct answer is: Manometer indicating inches water column

Question **296**

Incorrect

Mark 0.00 out of 1.00

Flag question

Question text

Referring to the drawing above , what is device 8 ?

Select one:

a.

Main power supply for circulating air blower

b.

Integrated furnace control

c.

Auxiliary fan control

d.

Service power junction box

Feedback

Your answer is incorrect.

The correct answer is: Integrated furnace control

Question **297**

Correct

Mark 1.00 out of 1.00

Flag question

Question text

Which of the following causes the burner to run continuously ? A short in the

Select one:

a.

Fan switch

b.

High limit

c.

Thermostat wiring

d.

Stepdown transformer

Feedback

Your answer is correct.

The correct answer is: Thermostat wiring

Question **298**
Incorrect

Mark 0.00 out of 1.00

Flag question

Question text
A flame that is waving or rolling out when the air circulation fan on a furnace comes on may indicate

Select one:

a.

Too much primary air

b.

All of the options are correct

c.

An over-pressurized manifold

d.

A cracked heat exchanger

Feedback
Your answer is incorrect.

The correct answer is: A cracked heat exchanger

Question **299**
Incorrect

Mark 0.00 out of 1.00

Flag question

Question text

To check if a high limit aquastat will shut down the gas to the main burner , the gas fitter should

Select one:

a.

Turn the operating limit to its lowest setting

b.

Turn the burner on and set the high limit aquastat to its highest setting

c.

Turn the burner on and set the high limit aquastat to its lowest setting

d.

Make sure the circulating pump is running

Feedback

Your answer is incorrect.

The correct answer is: Turn the burner on and set the high limit aquastat to its lowest setting

Question **300**

Correct

Mark 1.00 out of 1.00

Flag question

Question text

A customer complains that the furnace air circulating fan cycles ON and OFF frequently but the burner remains ON until the thermostat is satisfied. The fault is more than likely

Select one:

a.

Too low of a fan speed

b.

Too high of a fan speed

c.

An incorrect heat anticipator setting

d.

Colder than normal weather

Feedback

Your answer is correct.

The correct answer is: Too high of a fan speed

Question **301**

Incorrect

Mark 0.00 out of 1.00

Flag question

Question text

The normal set point of a domestic hot water tank thermostat would be

Select one:

a.

160 ° F (71 ° C)

b.

140 ° F (60 ° C)

c.

100 ° F (38 ° C)

d.

120 ° F (49 ° C)

Feedback

Your answer is incorrect.

The correct answer is: 140 ° F (60 ° C)

Question **302**

Incorrect

Mark 0.00 out of 1.00

Flag question

Question text

During the heating cycle of a forced air furnace the burner cycles ON and OFF but the fan runs continuously. This could be caused by

Select one:

a.

A fan speed that is set too low

b.

All the options are correct

c.

An incorrectly adjusted heat anticipator

d.

An dirty air filter

Feedback

Your answer is incorrect.

The correct answer is: All the options are correct

Question **303**

Incorrect

Mark 0.00 out of 1.00

Flag question

Question text

An operating standing pilot type forced air furnace has a 24 volt control system. While checking out the control circuit, a jumper was placed across the gas valve coil. Which one of the following conditions will result ?

Select one:

a.

The gas valve will not close

b.

The gas valve coil will burn out

c.

The secondary side of the transformer will burn out

d.

The thermostat heat anticipator will burn out

Feedback

Your answer is incorrect.

The correct answer is: The thermostat heat anticipator will burn out

Question **304**

Not answered

Marked out of 1.00

Flag question

Question text

When using non-metallic sheathed cable it shall be secured by straps